CE EMC
TEST REPORT

for

Switching Power supply

MODEL: PWS-920P-SQ; CPR-9211-1M2LF

Test Report Number:
T101203101-E

Issued for

Compuware Technology Inc.

5F, 232, Lian Cheng Road, Chung Ho City, Taipei Hsien 235, Taiwan, R.O.C.

Issued By:

Compliance Certification Services Inc.
Linkuo Laboratory
No. 81-1, Lane 210, Pa-De 2nd Rd., Luchu Hsiang,
Taoyuan Shien, (338), Taiwan, R.O.C.
TEL: 886-3-324-0332
FAX: 886-3-324-5235
E-Mail: service@ccsrf.com

Issued Date: December 15, 2010

Testing Laboratory
0363

ACCREDITED
TESTING CERT #0824.01

Note: *This report shall not be reproduced except in full, without the written approval of Compliance Certification Services Inc. This document may be altered or revised by Compliance Certification Services Inc. personnel only, and shall be noted in the revision section of the document. The client should not use it to claim product endorsement by TAF, A2LA, NIST or any government agencies. The test results in the report only apply to the tested sample.*

Revision History

Rev.		Issue Date		Revisions	Effect Page	Revised By
00		December 15, 2010		Initial Issue	ALL	Angel Hu

This report shall not be reproduced except in full, without the written approval of Compliance Certification Services.

TABLE OF CONTENTS

1 TEST CERTIFICATION....4
2 TEST RESULT SUMMARY....5
3 EUT DESCRIPTION....6
4 TEST METHODOLOGY....7
4.1. DECISION OF FINAL TEST MODE....7
4.2. EUT SYSTEM OPERATION....7
5 SETUP OF EQUIPMENT UNDER TEST....8
5.1. DESCRIPTION OF SUPPORT UNITS....8
5.2. CONFIGURATION OF SYSTEM UNDER TEST....8
6 FACILITIES AND ACCREDITATIONS....9
6.1. FACILITIES....9
6.2. ACCREDITATIONS....9
6.3. MEASUREMENT UNCERTAINTY....10
7 EMISSION TEST....11
7.1. CONDUCTED EMISSION MEASUREMENT....11
7.2. CONDUCTED EMISSION MEASUREMENT AT TELECOMMUNICATION PORTS....16
7.3. RADIATED EMISSION MEASUREMENT....19
7.4. HARMONICS CURRENT MEASUREMENT....26
7.5. VOLTAGE FLUCTUATION AND FLICKS MEASUREMENT....30
8 IMMUNITY TEST....34
8.1. GENERAL DESCRIPTION....34
8.2. GENERAL PERFORMANCE CRITERIA DESCRIPTION....35
8.3. ELECTROSTATIC DISCHARGE (ESD)....36
8.4. RADIATED, RADIO-FREQUENCY, ELECTROMAGNETIC FIELD (RS)....42
8.5. ELECTRICAL FAST TRANSIENT (EFT)....46
8.6. SURGE IMMUNITY TEST....48
8.7. CONDUCTED RADIO FREQUENCY DISTURBANCES (CS)....51
8.8. POWER FREQUENCY MAGNETIC FIELD....54
8.9. VOLTAGE DIP & VOLTAGE INTERRUPTIONS....57
9 PHOTOGRAPHS OF THE TEST CONFIGURATION....59
APPENDIX 1: PHOTOGRAPHS OF EUT....66

This report shall not be reproduced except in full, without the written approval of Compliance Certification Services.

1 TEST CERTIFICATION

Product:	Switching Power supply	
Model:	PWS-920P-SQ; CPR-9211-1M2LF	
Brand:	Supermicro; Compuware	
Applicant:	**Compuware Technology Inc.** 5F, 232, Lian Cheng Road, Chung Ho City, Taipei Hsien 235, Taiwan, R.O.C.	
Manufacturer:	**Compuware Technology Inc.** 5F, 232, Lian Cheng Road, Chung Ho City, Taipei Hsien 235, Taiwan, R.O.C.	
Tested:	December 7 ~ 13, 2010	
Test Voltage:	230VAC, 50Hz	
Applicable Standards:	**EN 55022:2006 + A1: 2007, Class B** **EN 61000-3-2: 2006, Class A** **EN 61000-3-3: 2008** **AS/NZS CISPR 22: 2006(*)**	**EN 55024: 1998 + A1: 2001 + A2: 2003** IEC 61000-4-2: 2008 IEC 61000-4-3: 2006+A1: 2007 IEC 61000-4-4: 2004 IEC 61000-4-5: 2005 IEC 61000-4-6: 2008 IEC 61000-4-8: 2001 IEC 61000-4-11: 2004

Deviation from Applicable Standard	
AS/NZS CISPR 22 2006:	According to ACMA announcement " ACMA will accept test reports where proof of compliance with radiated emissions testing above 1 GHz is not required until such testing is required by the AS/NZS, CISPR and EN versions."

The above equipment has been tested by Compliance Certification Services Inc., and found compliance with the requirements set forth in the Electromagnetic Compatibility Directive 2004/108/EC and technical standards mentioned above. The results of testing in this report apply only to the product/system, which was tested. Other similar equipment will not necessarily produce the same results due to production tolerance and measurement uncertainties.

Approved by:

Ethan Huang
Section Manager

Reviewed by:

Stan Lin
Supervisor

This report shall not be reproduced except in full, without the written approval of Compliance Certification Services.

2 TEST RESULT SUMMARY

EMISSION			
Standard	**Item**	**Result**	**Remarks**
EN 55022: 2006 + A1: 2007	Conducted (Main Port)	PASS	Meet Class B limit
	Conducted (Telecommunication port)	N/A	Not applicable, because the EUT doesn't have LAN port or Modem port.
	Radiated	PASS	Meet Class B limit
EN 61000-3-2: 2006	Harmonic current emissions	PASS	Meet Class A limit
EN 61000-3-3: 2008	Voltage fluctuations & flicker	PASS	Meets the requirements

IMMUNITY【 EN 55024(1998 + A1: 2001 + A2: 2003) 】			
Standard	**Item**	**Result**	**Remarks**
IEC 61000-4-2: 2008	ESD	PASS	Meets the requirements of Performance Criterion B
IEC 61000-4-3: 2006 + A1: 2007	RS	PASS	Meets the requirements of Performance Criterion A
IEC 61000-4-4: 2004	EFT	PASS	Meets the requirements of Performance Criterion B
IEC 61000-4-5: 2005	Surge	PASS	Meets the requirements of Performance Criterion B
IEC 61000-4-6: 2008	CS	PASS	Meets the requirements of Performance Criterion A
IEC 61000-4-8: 2001	PFMF	PASS	Meets the requirements of Performance Criterion A
IEC 61000-4-11:2004	Voltage dips & voltage variations	PASS	Meets the requirements of **Voltage Dips:** 1) >95% reduction Performance Criterion B 2) 30% reduction Performance Criterion C **Voltage Interruptions:** 1) >95% reduction Performance Criterion C

Note: 1. The statements of test result on the above are decided by the request of test standard only; the measurement uncertainties are not factored into this compliance determination.

2. The information of measurement uncertainty is available upon the customer's request.

This report shall not be reproduced except in full, without the written approval of Compliance Certification Services.

3 EUT DESCRIPTION

Product	Switching Power supply
Model	PWS-920P-SQ; CPR-9211-1M2LF
Brand	Supermicro; Compuware
Applicant	Compuware Technology Inc.
Serial Number	T101203101
Received Date	December 3, 2010
EUT Power Rating	AC I/P: 100-240V, 50-60Hz, 11-4.4A DC O/P: +12V, 75A, +5Vsb, 4A, 920W

Note: *1. The different between of two model numbers (on this report) are identical, except trade name, list as below:*

Model	*Trade Name*
PWS-920P-SQ	*Supermicro*
CPR-9211-1M2LF	*Compuware*

2. Client consigns only one sample to test (model number: PWS-920P-SQ). Therefore, the testing Lab. just guarantees the unit, which has been tested.

This report shall not be reproduced except in full, without the written approval of Compliance Certification Services.

4 TEST METHODOLOGY

4.1. DECISION OF FINAL TEST MODE

1. The following test mode(s) were scanned during the preliminary test:

Pre-Test Mode
Mode 1: Full Load

2. After the preliminary scan, the following test mode was found to produce the highest emission level.

Final Test Mode		
Emission	Conducted Emission	**Mode 1**
	Radiated Emission	**Mode 1**
Immunity		**Mode 1**

Then, the above highest emission mode of the configuration of the EUT and cable was chosen for all final test items.

4.2. EUT SYSTEM OPERATION

Turn on the power of all equipment during all tests

This report shall not be reproduced except in full, without the written approval of Compliance Certification Services.

5 SETUP OF EQUIPMENT UNDER TEST

5.1. DESCRIPTION OF SUPPORT UNITS

The EUT has been tested as an independent unit together with other necessary accessories or support units. The following support units or accessories were used to form a representative test configuration during the tests.

No.	Equipment	Model No.	Serial No.	FCC ID	Trade Name	Data Cable	Power Cord
	N/A						

****No any support equipment during the test.**

Note: Grounding was established in accordance with the manufacturer's requirements and conditions for the intended use.

5.2. CONFIGURATION OF SYSTEM UNDER TEST

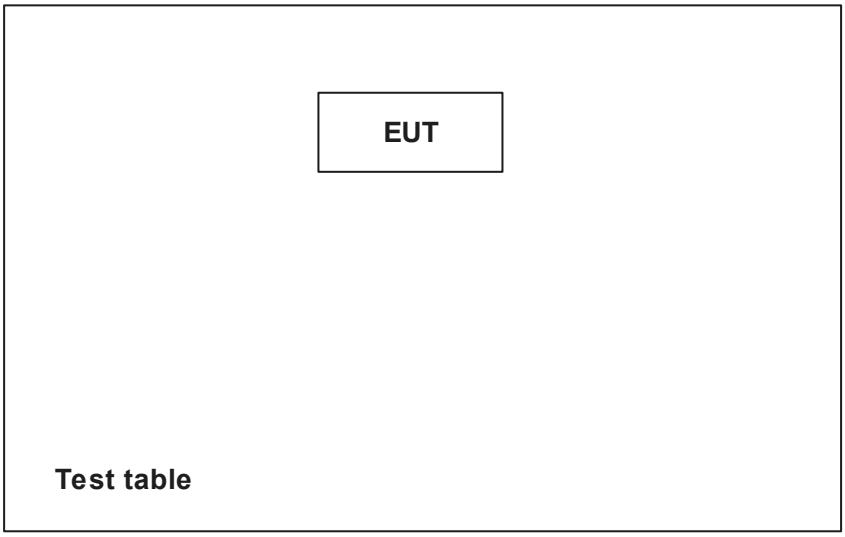

This report shall not be reproduced except in full, without the written approval of Compliance Certification Services.

6 FACILITIES AND ACCREDITATIONS

6.1. FACILITIES

All measurement facilities used to collect the measurement data are located at
No. 81-1, Lane 210, Pa-De 2nd Rd., Luchu Hsiang, Taoyuan Shien, Taiwan.

The sites are constructed in conformance with the requirements of ANSI C63.4 and CISPR Publication 22. All receiving equipment conforms to CISPR 16-1-1, CISPR 16-1-2, CISPR 16-1-3, CISPR 16-1-4, CISPR 16-1-5 and CISPR 16-2-3.

6.2. ACCREDITATIONS

Our laboratories are accredited and approved by the following approval agencies according to ISO/IEC 17025.

Taiwan	TAF
USA	A2LA

The measuring facility of laboratories has been authorized or registered by the following approval agencies.

Canada	Industry Canada
Norway	Nemko
Japan	VCCI
Taiwan	BSMI
USA	FCC

Copies of granted accreditation certificates are available for downloading from our web site, http:///www.ccsrf.com

This report shall not be reproduced except in full, without the written approval of Compliance Certification Services.

6.3. MEASUREMENT UNCERTAINTY

Where relevant, the following measurement uncertainty levels have been estimated for tests performed on the EUT as specified in CISPR 16-4-2:

Measurement	Frequency	Uncertainty
Conducted emissions	9kHz~30MHz	± 2.0878
Radiated emissions	30~200MHz	± 3.8906
	200~1000MHz	± 3.8688

This uncertainty represents an expanded uncertainty expressed at approximately the 95% confidence level using a coverage factor of k=2.

Consistent with industry standard (e.g. CISPR 22: 2006, clause 11, Measurement Uncertainty) determining compliance with the limits shall be base on the results of the compliance measurement. Consequently the measure emissions being less than the maximum allowed emission result in this be a compliant test or passing test.

The acceptable measurement uncertainty value without requiring revision of the compliance statement is base on conducted and radiated emissions being less than U_{CISPR} which is 3.6dB and 5.2dB respectively. CCS values (called U_{Lab} in CISPR 16-4-2) is less than U_{CISPR} as shown in the table above. Therefore, MU need not be considered for compliance.

This report shall not be reproduced except in full, without the written approval of Compliance Certification Services.

7 EMISSION TEST

7.1. CONDUCTED EMISSION MEASUREMENT

7.1.1. LIMITS

FREQUENCY (MHz)	Class A (dBuV)		Class B (dBuV)	
	Quasi-peak	Average	Quasi-peak	Average
0.15 - 0.5	79	66	66 - 56	56 - 46
0.50 - 5.0	73	60	56	46
5.0 - 30.0	73	60	60	50

NOTE:

(1) The lower limit shall apply at the transition frequencies.
(2) The limit decreases in line with the logarithm of the frequency in the range 0.15 to 0.50 MHz.
(3) All emanations from a class A/B digital device or system, including any network of conductors and apparatus connected thereto, shall not exceed the level of field strengths specified above.

7.1.2. TEST INSTRUMENTS

Conducted Emission Room #3				
Name of Equipment	Manufacturer	Model	Serial Number	Calibration Due
EMI Test Receiver	R&S	ESCS30	845552/030	05/27/2011
LISN	R&S	ENV216	100069	01/27/2011
LISN	FCC	FCC-LISN-50/250-16-2-07	06013	10/13/2011
Test S/W	CCS-3A1-CE			

NOTE: 1. The calibration interval of the above test instruments is 12 months and the calibrations are traceable to NML/ROC and NIST/USA.
2. N.C.R = No Calibration Request.

This report shall not be reproduced except in full, without the written approval of Compliance Certification Services.

7.1.3. TEST PROCEDURES (please refer to measurement standard or CCS SOP PA-031)

Procedure of Preliminary Test

- The EUT and support equipment, if needed, were set up as per the test configuration to simulate typical usage per the user's manual. When the EUT is a tabletop system, a wooden table with a height of 0.8 meters is used and is placed on the ground plane as per EN 55022 (see Test Facility for the dimensions of the ground plane used). When the EUT is a floor standing equipment, it is placed on the ground plane, which has a 3-12 mm non-conductive covering to insulate the EUT from the ground plane.
- All I/O cables were positioned to simulate typical actual usage as per EN 55022.
- The EUT installed by AC main power, through a Line Impedance Stabilization Network (LISN), which was supplied power source and was grounded to the ground plane.
- All support equipment power by a second LISN.
- The test program of the EUT was started. Emissions were measured on each current carrying line of the EUT using an EMI Test Receiver connected to the LISN powering the EUT.
- The Receiver scanned from 150kHz to 30MHz for emissions in each of the test modes.
- During the above scans, the emissions were maximized by cable manipulation.
- The test mode(s) described in Item 3.1 were scanned during the preliminary test.
- After the preliminary scan, we found the test mode described in Item 3.1 producing the highest emission level.
- The worst configuration of EUT and cable of the above highest emission level were recorded for reference of the final test.

Procedure of Final Test

- EUT and support equipment were set up on the test bench as per the configuration with highest emission level in the preliminary test.
- A scan was taken on both power lines, Line 1 and Line 2, recording at least the six highest emissions. Emission frequency and amplitude were recorded into a computer in which correction factors were used to calculate the emission level and compare reading to the applicable limit.
- The test data of the worst-case condition(s) was recorded.

This report shall not be reproduced except in full, without the written approval of Compliance Certification Services.

7.1.4. TEST SETUP

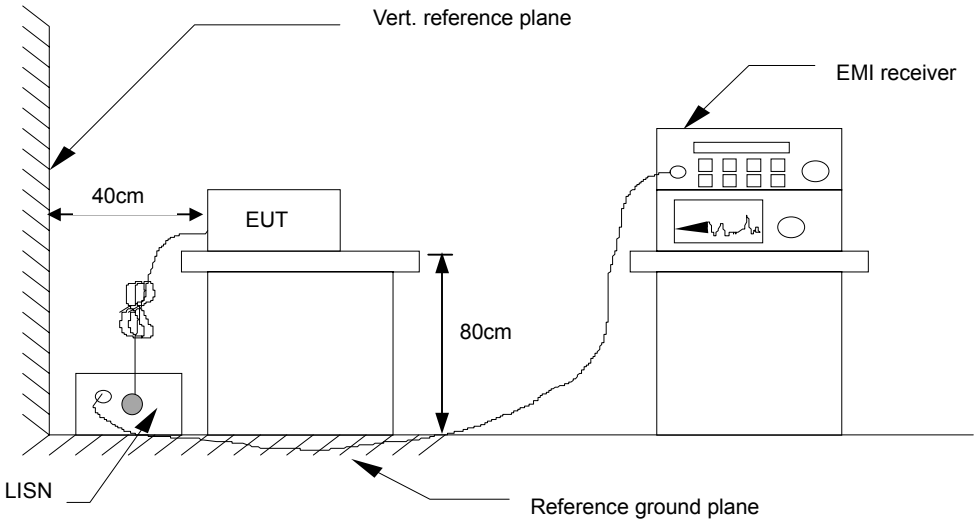

- For the actual test configuration, please refer to the related item – Photographs of the Test Configuration.

7.1.5. DATA SAMPLE:

Frequency (MHz)	QuasiPeak reading (dBuV)	Average reading (dBuV)	Correctrion factor (dB)	QuasiPeak result (dBuV)	Average result (dBuV)	QuasiPeak. limit (dBuV)	Average limit (dBuV)	QuasiPeak margin (dB)	Average margin (dB)	Remark
x.xx	43.95	33.00	10.00	53.95	43.00	79.00	66.00	-25.05	-23.00	Pass

Frequency (MHz) = Emission frequency in MHz
Reading (dBuV) = Uncorrected Analyzer/Receiver reading + Insertion loss of LISN, if it > 0.5 dB
Correction Factor (dB) = LISN Factor + Cable loss
Result (dBuV) = Raw reading converted to dBuV and CF added
Limit (dBuV) = Limit stated in standard
Margin (dB) = Result (dBuV) – Limit (dBuV)

This report shall not be reproduced except in full, without the written approval of Compliance Certification Services.

7.1.6. TEST RESULTS

CCS Conduction Test 3

Model No.	PWS-920P-SQ	**6dB Bandwidth**	9 kHz
Environmental Conditions	25°C, 57% RH	**Test Mode**	Mode 1
Tested By	Han Chaic	**Line**	L1

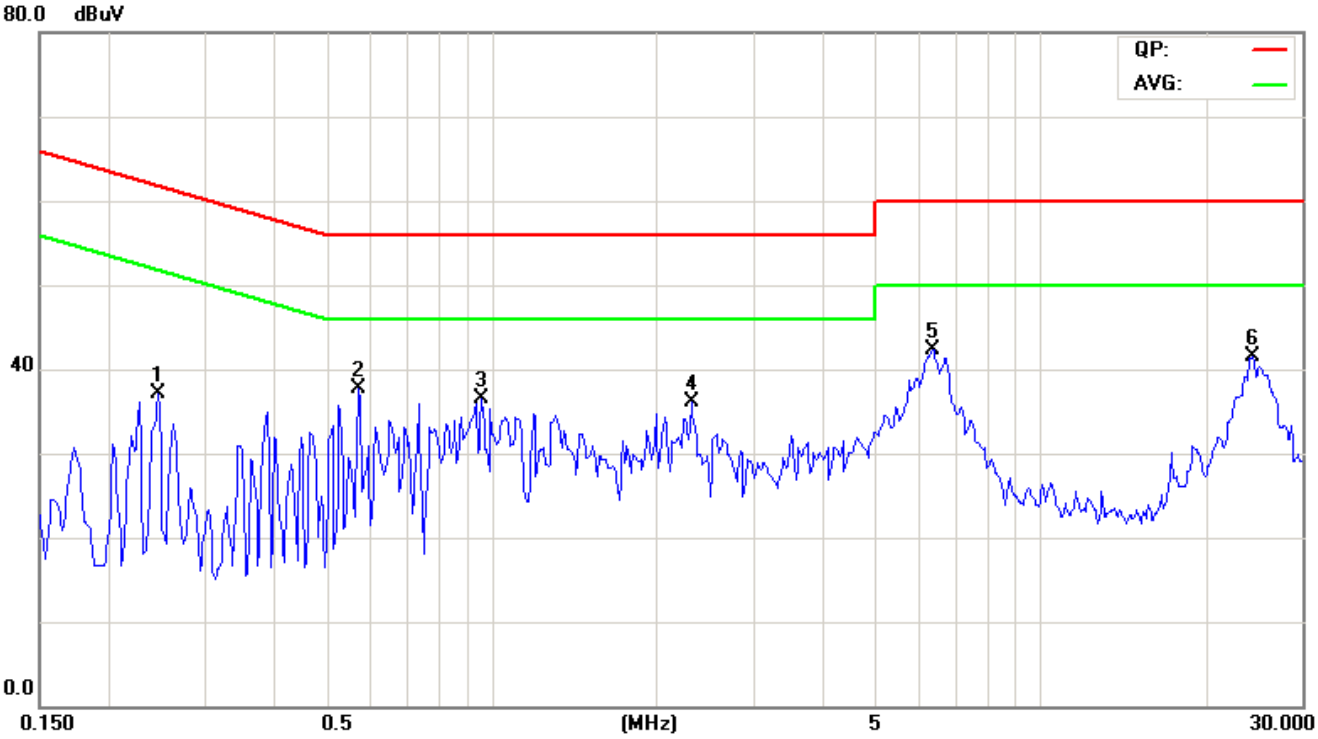

NO.	Frequency	QuasiPeak reading	Average reading	Correction factor	QuasiPeak result	Average result	QuasiPeak limit	Average limit	QuasiPeak margin	Average margin	Remark
	(MHz)	(dBuV)	(dBuV)	(dB)	(dBuV)	(dBuV)	(dBuV)	(dBuV)	(dB)	(dB)	(Pass/Fail)
1	0.2477	25.00	19.60	9.70	34.70	29.30	61.83	51.83	-27.13	-22.53	Pass
2*	0.5758	25.65	18.65	9.45	35.10	28.10	56.00	46.00	-20.90	-17.90	Pass
3	0.9586	25.47	18.67	9.13	34.60	27.80	56.00	46.00	-21.40	-18.20	Pass
4	2.3102	21.67	13.27	9.23	30.90	22.50	56.00	46.00	-25.10	-23.50	Pass
5	6.3805	28.74	20.44	9.66	38.40	30.10	60.00	50.00	-21.60	-19.90	Pass
6	24.5016	23.07	14.87	10.73	33.80	25.60	60.00	50.00	-26.20	-24.40	Pass

REMARKS: L1 = Line One (Live Line)

This report shall not be reproduced except in full, without the written approval of Compliance Certification Services.

CCS Conduction Test 3

Model No.	PWS-920P-SQ	**6dB Bandwidth**	9 kHz
Environmental Conditions	25°C, 57% RH	**Test Mode**	Mode 1
Tested By	Han Chaic	**Line**	L2

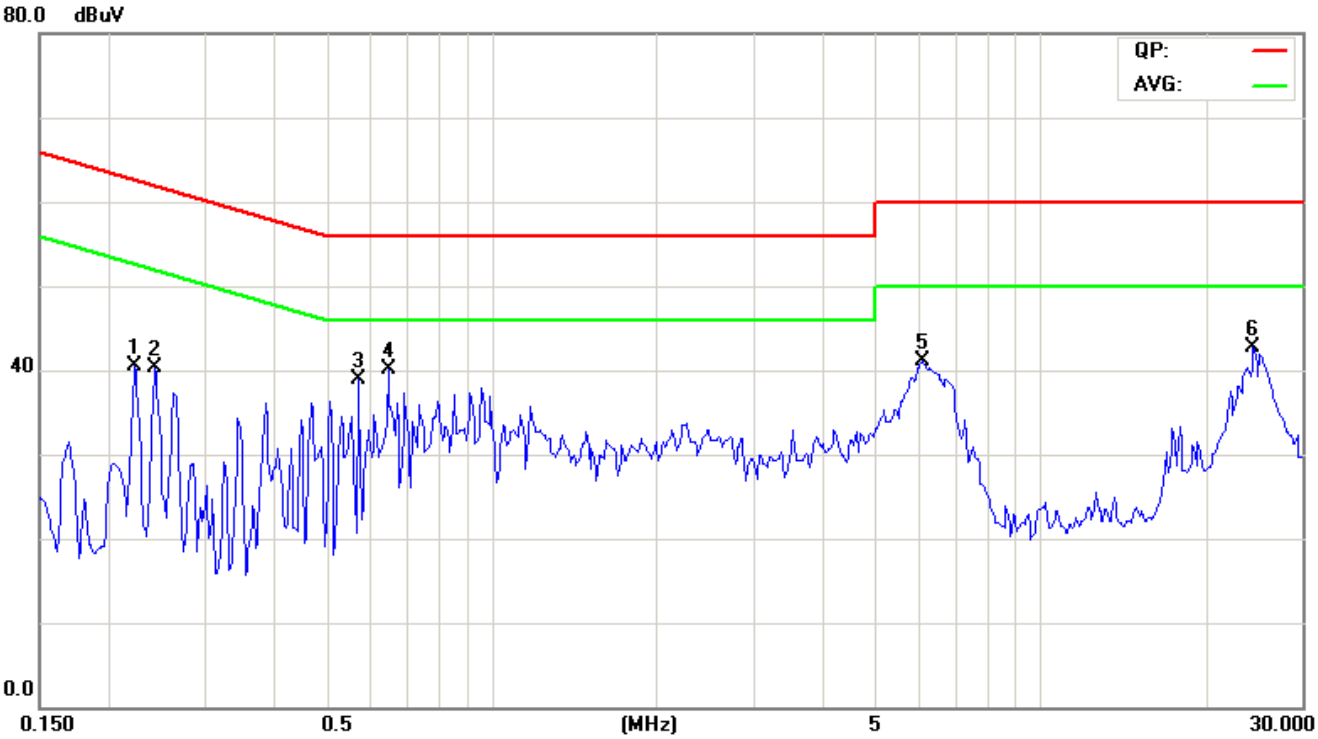

NO.	Frequency	QuasiPeak reading	Average reading	Correction factor	QuasiPeak result	Average result	QuasiPeak limit	Average limit	QuasiPeak margin	Average margin	Remark
	(MHz)	(dBuV)	(dBuV)	(dB)	(dBuV)	(dBuV)	(dBuV)	(dBuV)	(dB)	(dB)	(Pass/Fail)
1	0.2242	29.49	24.49	9.71	39.20	34.20	62.66	52.66	-23.46	-18.46	Pass
2	0.2437	29.79	25.59	9.71	39.50	35.30	61.97	51.97	-22.47	-16.67	Pass
3*	0.5719	27.29	20.29	9.61	36.90	29.90	56.00	46.00	-19.10	-16.10	Pass
4	0.6500	26.49	20.09	9.61	36.10	29.70	56.00	46.00	-19.90	-16.30	Pass
5	6.0953	27.64	20.14	9.86	37.50	30.00	60.00	50.00	-22.50	-20.00	Pass
6	24.4664	27.52	17.32	10.58	38.10	27.90	60.00	50.00	-21.90	-22.10	Pass

REMARKS: L2 = Line Two (Neutral Line)

This report shall not be reproduced except in full, without the written approval of Compliance Certification Services.

7.2. CONDUCTED EMISSION MEASUREMENT AT TELECOMMUNICATION PORTS

7.2.1. LIMITS

For Class A Equipment

FREQUENCY (MHz)	Voltage Limit (dBuV)		Current Limit (dBuA)	
	Quasi-peak	Average	Quasi-peak	Average
0.15 ~ 0.5	97 ~ 87	84 ~ 74	53 ~ 43	40 ~ 30
0.5 ~ 30.0	87	74	43	30

NOTE: The limits decrease linearly with the logarithm of the frequency in the range 0.15 MHz to 0.5 MHz.

For Class B Equipment

FREQUENCY (MHz)	Voltage Limit (dBuV)		Current Limit (dBuA)	
	Quasi-peak	Average	Quasi-peak	Average
0.15 - 0.5	84 ~ 74	74 ~ 64	40 ~ 30	30 ~ 20
0.5 - 30.0	74	64	30	20

NOTE: The limits decrease linearly with the logarithm of the frequency in the range 0,15 MHz to 0,5 MHz.

7.2.2. TEST INSTRUMENTS

Conducted Emission Room				
Name of Equipment	Manufacturer	Model	Serial Number	Calibration Due
N/A				

NOTE: 1. The calibration interval of the above test instruments is 12 months and the calibrations are traceable to NML/ROC and NIST/USA.

2. N.C.R = No Calibration Request.

This report shall not be reproduced except in full, without the written approval of Compliance Certification Services.

7.2.3. TEST PROCEDURE (please refer to measurement standard or CCS SOP PA-031)

- Selecting ISN for unscreened cable or a current probe for screened cable to take measurement.
- The port of the EUT was connected to the remote side support equipment through the ISN/Current Probe and communication in normal condition.
- Making a overall range scan by using the test receiver controlled by controller and record at least six highest emissions for showing in the test report.
- Emission frequency and amplitude were recorded into a computer in which correction factors were used to calculate the emission level and compare reading to the applicable limit.
- In case of measuring on the screened cable, the current limit shall be applied; otherwise the voltage limit should be applied.
- The following test mode was scanned during the preliminary test:

No applicable, because the EUT doesn't have LAN port or Modem port.

7.2.4. TEST SETUP

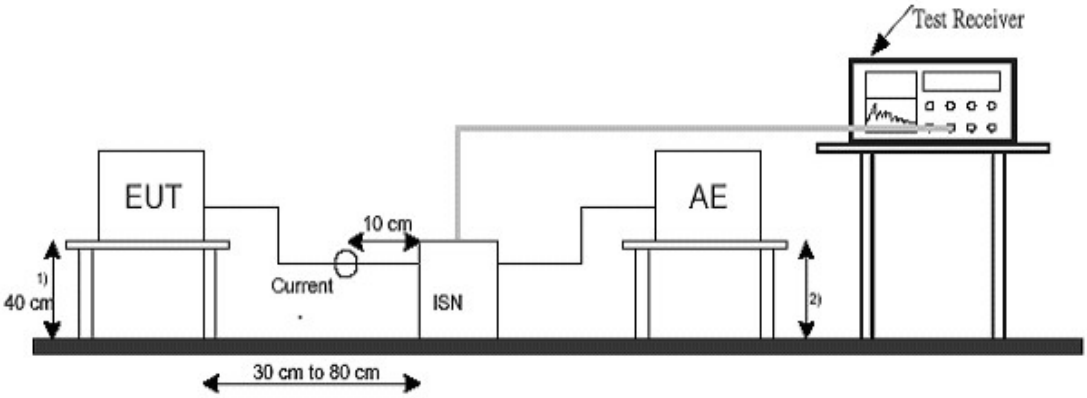

1) Distance to the ground reference plane (vertical or horizontal).
2) Distance to the ground reference plane is not critical.

- For the actual test configuration, please refer to the related item – Photographs of the Test Configuration.

This report shall not be reproduced except in full, without the written approval of Compliance Certification Services.

7.2.5. DATA SAMPLE:

Frequency (MHz)	QuasiPeak reading (dBuV)	Average reading (dBuV)	Correctrion factor (dB)	QuasiPeak result (dBuV)	Average result (dBuV)	QuasiPeak. limit (dBuV)	Average limit (dBuV)	QuasiPeak margin (dB)	Average margin (dB)	Remark
x.xx	43.95	33.00	10.00	53.95	43.00	74.00	64.00	-20.05	-21.00	Pass

Frequency (MHz) = Emission frequency in MHz
Reading (dBuV) = Uncorrected Analyzer/Receiver reading + Insertion loss of LISN, if it > 0.5 dB
Correction Factor (dB) = ISN Factor + Cable loss
Result (dBuV) = Raw reading converted to dBuV and CF added
Limit (dBuV) = Limit stated in standard
Margin (dB) = Result (dBuV) – Limit (dBuV)

7.2.6. TEST RESULTS

No applicable, because the EUT doesn't have LAN port or Modem port.

This report shall not be reproduced except in full, without the written approval of Compliance Certification Services.

7.3. RADIATED EMISSION MEASUREMENT

7.3.1. LIMITS

FREQUENCY (MHz)	dBuV/m (At 10m)	
	Class A	Class B
30 ~ 230	40	30
230 ~ 1000	47	37

NOTE: (1) The lower limit shall apply at the transition frequencies.
(2) Emission level (dBuV/m) = 20 log Emission level (uV/m).

FREQUENCY (MHz)	dBuV/m (At 3m)			
	Class A		Class B	
	Average	Peak	Average	Peak
1000 ~ 3000	56	76	50	70
3000 ~ 6000	60	80	54	74

NOTE: (1) The lower limit shall apply at the transition frequencies.

According to EN55022: 2006 + A1: 2007 clause 6.2, the measurement frequency range shown in the following table:

Highest frequency generated or used within the EUT or on which the EUT operates or tunes (MHz)	Upper frequency of measurement range (MHz)
Less than 108	1000
108-500	2000
500-1000	5000
Above 1000	5 times of the highest frequency or 6GHz, whichever is less

This report shall not be reproduced except in full, without the written approval of Compliance Certification Services.

7.3.2. TEST INSTRUMENTS

Open Area Test Site # 5				
Name of Equipment	**Manufacturer**	**Model**	**Serial Number**	**Calibration Due**
Spectrum Analyzer	ADVANTEST	R3132	91700456	N.C.R
EMI Test Receiver	R&S	ESVS10	846285/016	06/10/2011
Bilog Antenna	TESEQ	CBL 6112D	23190	06/04/2011
Pre-Amplifier	WIRELESS	FPA-6592G	060010	09/04/2011
Turn Table	CCS	CC-T-1F	N/A	N.C.R
Antenna Tower	CCS	CC-A-1F	N/A	N.C.R
Controller	CCS	CC-C-1F	04	N.C.R
RF Switch	ANRITSU	MP59B	10877	N.C.R
Site NSA	CCS	N/A	N/A	12/25/2010
Test S/W	LabVIEW 6.1 (CCS OATS EMI SW V2.7)			

NOTE: 1. The calibration interval of the above test instruments is 12 months and the calibrations are traceable to NML/ROC and NIST/USA.

2. N.C.R = No Calibration Request.

This report shall not be reproduced except in full, without the written approval of Compliance Certification Services.

7.3.3. TEST PROCEDURE (please refer to measurement standard or CCS SOP PA-031)

Procedure of Preliminary Test

- The equipment was set up as per the test configuration to simulate typical usage per the user's manual. When the EUT is a tabletop system, a wooden turntable with a height of 0.8 meters is used which is placed on the ground plane. When the EUT is a floor standing equipment, it is placed on the ground plane which has a 3-12 mm non-conductive covering to insulate the EUT from the ground plane.
- Support equipment, if needed, was placed as per EN 55022.
- All I/O cables were positioned to simulate typical usage as per EN 55022.
- The EUT received AC power source from the outlet socket under the turntable. All support equipment power received from another socket under the turntable.
- The antenna was placed at 3 or 10 meter away from the EUT as stated in EN 55022. The antenna connected to the Spectrum Analyzer via a cable and at times a pre-amplifier would be used.
- The Analyzer / Receiver quickly scanned from 30MHz to 6000MHz. The EUT test program was started. Emissions were scanned and measured rotating the EUT to 360 degrees and positioning the antenna 1 to 4 meters (For Below 1GHz) or 1 meter (For Above 1GHz) above the ground plane, in both the vertical and the horizontal polarization, to maximize the emission reading level.
- The test mode(s) described in Item 3.1 were scanned during the preliminary test:
- After the preliminary scan, we found the test mode described in Item 3.1 producing the highest emission level.
- The worst configuration of EUT and cable, antenna position, polarization and turntable position of the above highest emission levels were recorded for the final test.

Procedure of Final Test

- EUT and support equipment were set up on the turntable as per the configuration with highest emission level in the preliminary test.
- The Analyzer / Receiver scanned from 30MHz to 6000MHz. Emissions were scanned and measured rotating the EUT to 360 degrees, varying cable placement and positioning the antenna 1 to 4 meters above the ground plane, in both the vertical and the horizontal polarization, to maximize the emission reading level.
- Recording at least the six highest emissions. Emission frequency, amplitude, antenna position, polarization and turntable position were recorded into a computer in which correction factors were used to calculate the emission level and compare reading to the applicable limit and Q.P. (For Below 1GHz) or Peak/Average (For Above 1GHz) reading is presented.
- The test data of the worst-case condition(s) was recorded.

This report shall not be reproduced except in full, without the written approval of Compliance Certification Services.

7.3.4. TEST SETUP

Below 1GHz

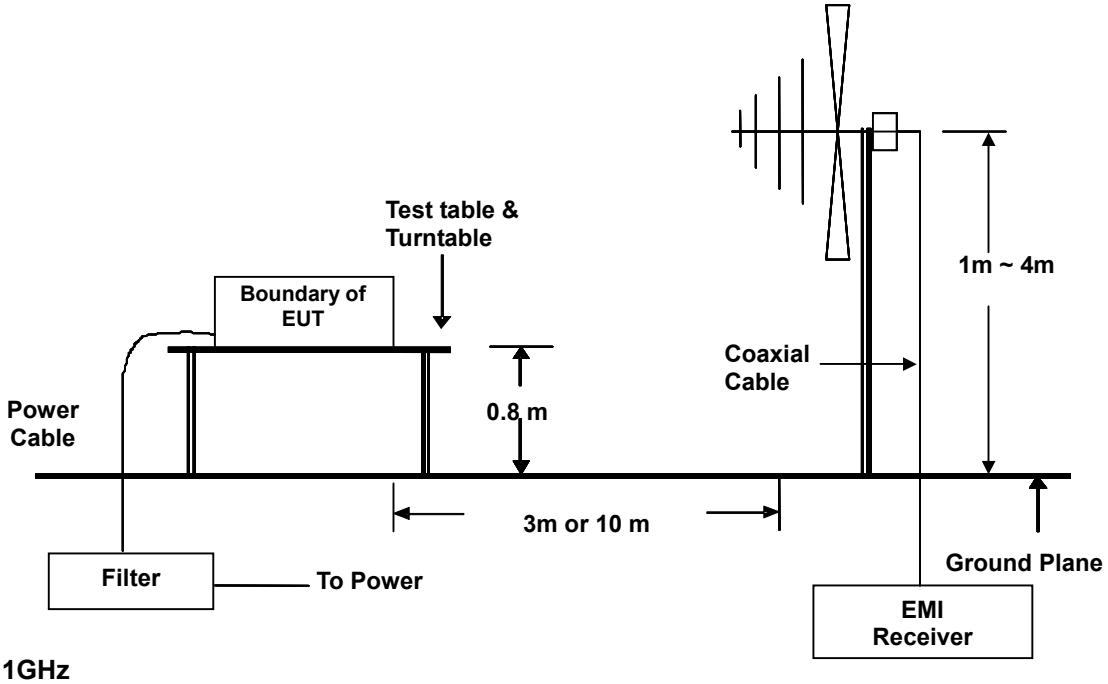

Above 1GHz

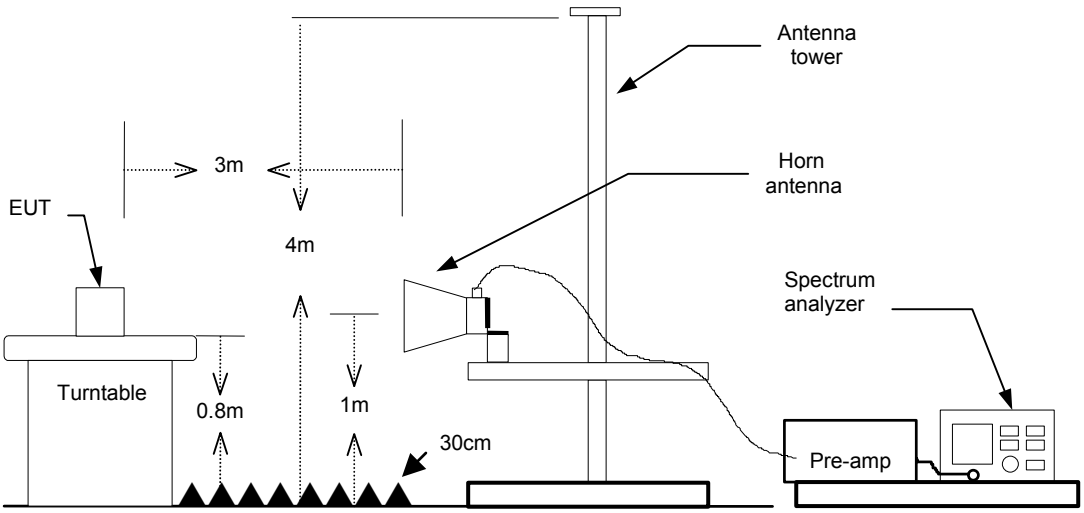

- For the actual test configuration, please refer to the related item – Photographs of the Test Configuration.

This report shall not be reproduced except in full, without the written approval of Compliance Certification Services.

7.3.5. DATA SAMPLE:

Below 1GHz

Frequency (MHz)	Reading (dBuV)	Correction Factor (dB/m)	Result (dBuV/m)	Limit (dBuV/m)	Margin (dB)	Degree (∘)	Height (cm)	Remark
xx.xx	16.49	9.86	26.35	30.00	-3.65	116.00	101.00	QP

Above 1GHz

Frequency	Corr.	Reading		Result		Limit		Margin		Degree	Height
	Factor	Average	Peak	Average	Peak	Average	Peak	Average	Peak		
MHz	(dBuV/m)	(dBuV/m)	(dBuV/m)	(dBuV/m)	(dBuV/m)	(dBuV/m)	(dBuV/m)	(dB)	(dB)	(°)	(cm)
xxxx.xxx	-4.35	49.81	58.74	45.46	54.39	50.00	70.00	-4.54	-15.61	125	100

Frequency (MHz) = Emission frequency in MHz
Reading (dBuV) = Uncorrected Analyzer / Receiver reading
Correction Factor (dB/m) = Antenna factor + Cable loss – Amplifier gain
Result (dBuV/m) = Reading (dBuV) + Corr. Factor (dB/m)
Limit (dBuV/m) = Limit stated in standard
Margin (dB) = Result (dBuV/m) – Limit (dBuV/m)
Q.P. = Quasi-Peak

This report shall not be reproduced except in full, without the written approval of Compliance Certification Services.

7.3.6. TEST RESULTS

Model No.	PWS-920P-SQ	**Test Mode**	Mode 1
Environmental Conditions	18°C, 60% RH	**6dB Bandwidth**	120 kHz
Antenna Pole	Vertical	**Antenna Distance**	10m
Detector Function:	Quasi-peak.	**Tested By**	Tony Tsai

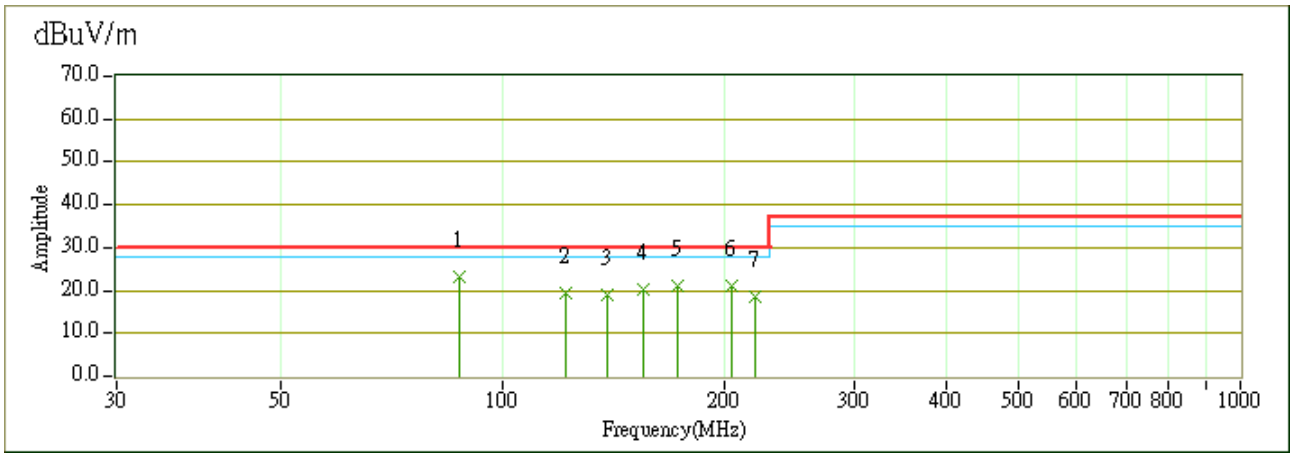

No.	Frequency (MHz)	Reading (dBuV)	Correction Factor(dB/m)	Result (dBuV/m)	Limit (dBuV/m)	Margin (dB)	Degree (°)	Height (cm)	Remark
1	87.51	41.36	-18.23	23.14	30.00	-6.86	360.00	100.00	QP
2	121.90	34.85	-15.24	19.61	30.00	-10.39	0.00	100.00	QP
3	138.37	34.94	-15.92	19.02	30.00	-10.98	0.00	100.00	QP
4	155.40	37.21	-17.01	20.20	30.00	-9.80	285.40	100.00	QP
5	172.85	38.76	-17.64	21.11	30.00	-8.89	43.60	100.00	QP
6	204.60	37.86	-16.98	20.89	30.00	-9.11	152.40	100.00	QP
7	220.15	35.47	-16.89	18.57	30.00	-11.43	346.00	100.00	QP

REMARKS: The other emission levels were very low against the limit.

This report shall not be reproduced except in full, without the written approval of Compliance Certification Services.

Model No.	PWS-920P-SQ	**Test Mode**	Mode 1
Environmental Conditions	18°C, 60% RH	**6dB Bandwidth**	120 kHz
Antenna Pole	Horizontal	**Antenna Distance**	10m
Detector Function:	Quasi-peak.	**Tested By**	Tony Tsai

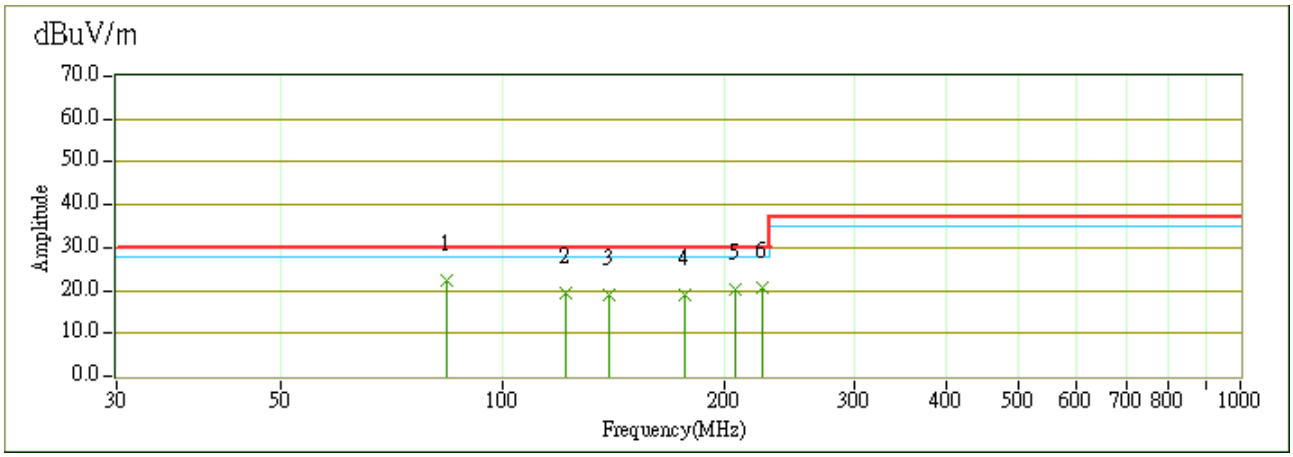

No.	Frequency (MHz)	Reading (dBuV)	Correction Factor(dB/m)	Result (dBuV/m)	Limit (dBuV/m)	Margin (dB)	Degree (°)	Height (cm)	Remark
1	84.16	41.50	-19.03	22.47	30.00	-7.53	160.50	400.00	QP
2	121.69	34.79	-15.23	19.56	30.00	-10.44	29.30	400.00	QP
3	139.42	34.94	-15.97	18.97	30.00	-11.03	29.30	400.00	QP
4	176.90	36.57	-17.75	18.82	30.00	-11.18	360.00	400.00	QP
5	206.70	37.16	-16.96	20.20	30.00	-9.80	141.40	400.00	QP
6	225.00	37.60	-16.87	20.74	30.00	-9.26	15.40	400.00	QP

REMARKS: The other emission levels were very low against the limit.

This report shall not be reproduced except in full, without the written approval of Compliance Certification Services.

7.4. HARMONICS CURRENT MEASUREMENT

7.4.1. LIMITS OF HARMONICS CURRENT MEASUREMENT

Limits for Class A equipment	
Harmonics Order n	Max. permissible harmonics current A
Odd harmonics	
3	2.30
5	1.14
7	0.77
9	0.40
11	0.33
13	0.21
15<=n<=39	0.15x15/n
Even harmonics	
2	1.08
4	0.43
6	0.30
8<=n<=40	0.23x8/n

Limits for Class D equipment		
Harmonics Order n	Max. permissible harmonics current per watt mA/W	Max. permissible harmonics current A
Odd Harmonics only		
3	3.4	2.30
5	1.9	1.14
7	1.0	0.77
9	0.5	0.40
11	0.35	0.33
13	0.30	0.21
15<=n<=39	3.85/n	0.15x15/n

NOTE: 1. Class A and Class D are classified according to item 7.4.3.

2. According to section 7 of EN 61000-3-2, the above limits for all equipment except for lighting equipment having an active input power > 75 W and no limits apply for equipment with an active input power up to and including 75 W.

7.4.2. TEST INSTRUMENTS

Immunity Shielded Room				
Name of Equipment	**Manufacturer**	**Model**	**Serial Number**	**Calibration Due**
HARMONICS SYSTEM	EMC-PARTNER	HARMONICS-1000	094	01/18/2011
Test S/W	HARCS Immunity (4.10)			

NOTE: The calibration interval of the above test instruments is 12 months and the calibrations are traceable to NML/ROC and NIST/USA.

This report shall not be reproduced except in full, without the written approval of Compliance Certification Services.

7.4.3. TEST PROCEDURE (please refer to measurement standard or CCS SOP PA-029)

- The EUT was placed on the top of a wooden table 0.8 meters above the ground and operated to produce the maximum harmonic components under normal operating conditions for each successive harmonic component in turn.
- The classification of EUT is according to section 5 of EN 61000-3-2.
- The EUT is classified as follows:

Class A: Balanced three-phase equipment, Household appliances excluding equipment as Class D, Tools excluding portable tools, Dimmers for incandescent lamps, audio equipment, equipment not specified in one of the three other classes.

Class B: Portable tools; Arc welding equipment which is not professional equipment.

Class C: Lighting equipment.

Class D: Equipment having a specified power less than or equal to 600 W of the following types: Personal computers and personal computer monitors and television receivers.

- The correspondent test program of test instrument to measure the current harmonics emanated from EUT is chosen. The measure time shall be not less than the time necessary for the EUT to be exercised.

7.4.4. TEST SETUP

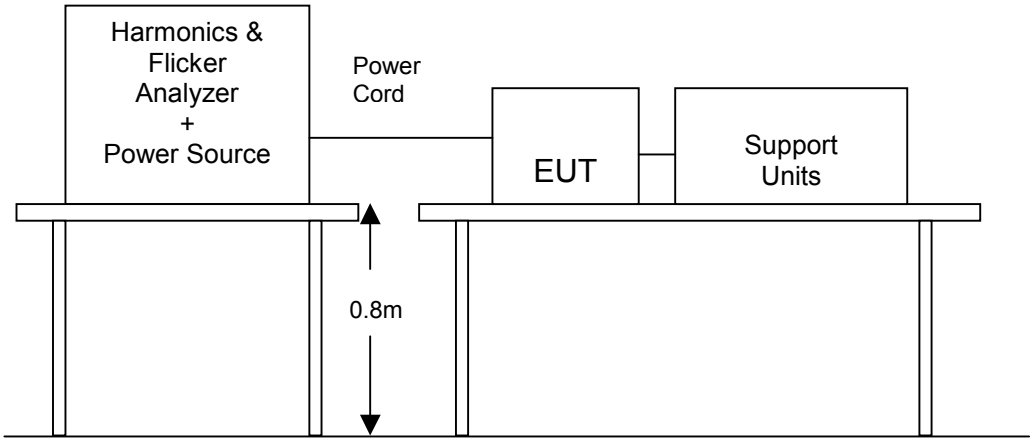

- For the actual test configuration, please refer to the related item – Photographs of the Test Configuration.

This report shall not be reproduced except in full, without the written approval of Compliance Certification Services.

7.4.5. TEST RESULTS

Power Consumption	863.4W	**Test Results**	PASS
Environmental Conditions	20°C, 50% RH	**Limits**	Class ☒ A ☐ B ☐ C ☐ D
Test Mode	Mode 1	**Tested By**	Tony Tsai

Operator : Tony Tsai

Unit : Switching Power supply

Serial number : PWS-920P-SQ

Remarks : Temp.:20°C Hum:50%

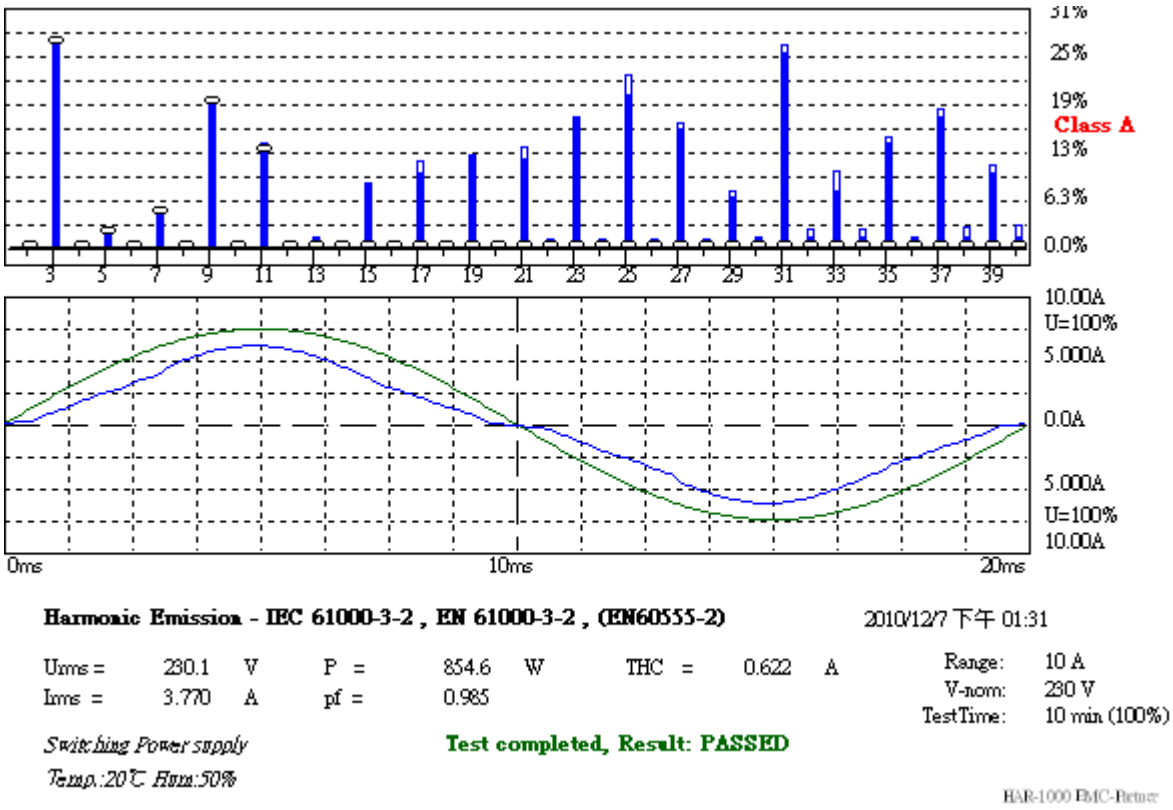

Full Bar : Actual Values

Empty Bar : Maximum Values

Blue : Current , Green : Voltage , Red : Failed

This report shall not be reproduced except in full, without the written approval of Compliance Certification Services.

Measurement

Supermicro Date : 2010/12/7 PM 01:31 V4.17

Operator : Tony Tsai
Unit : Switching Power supply
Serial number : PWS-920P-SQ
Remarks : Temp.:20°C Hum:50%

Urms =	230.1V	Freq =	50.000	Range:	10 A
Irms =	3.770A	Ipk =	6.147A	cf =	1.631
P =	854.6W	S =	867.4VA	pf =	0.985
THDi =	16.5 %	THDu =	0.10 %	Class A	

Test - Time : 10min (100 %)

Test completed, Result: PASSED

Order	Freq. [Hz]	Imax [A]	Imax% [%]	Imax%L [%]	Limit [A]	Status
1	50	3.7750	100.15			
2	100	0.0061	0.1619	0.5651	1.0800	
3	150	0.6183	16.402	26.882	2.3000	
4	200	0.0012	0.0324	0.2839	0.4300	
5	250	0.0238	0.6315	2.0880	1.1400	
6	300	0.0006	0.0162	0.2035	0.3000	
7	350	0.0372	0.9877	4.8353	0.7700	
8	400	0.0006	0.0162	0.2654	0.2300	
9	450	0.0757	2.0078	18.921	0.4000	
10	500	0.0006	0.0162	0.3317	0.1840	
11	550	0.0439	1.1658	13.317	0.3300	
12	600	0.0006	0.0162	0.3981	0.1533	
13	650	0.0024	0.0648	1.1626	0.2100	
14	700	0.0006	0.0162	0.4644	0.1314	
15	750	0.0122	0.3238	8.1380	0.1500	
16	800	0.0000	0.0000	0.0000	0.1150	
17	850	0.0146	0.3886	11.068	0.1324	
18	900	0.0006	0.0162	0.5971	0.1022	
19	950	0.0140	0.3724	11.854	0.1184	
20	1000	0.0006	0.0162	0.6634	0.0920	
21	1050	0.0140	0.3724	13.102	0.1071	
22	1100	0.0006	0.0162	0.7298	0.0836	
23	1150	0.0165	0.4372	16.846	0.0978	
24	1200	0.0006	0.0162	0.7961	0.0767	
25	1250	0.0201	0.5343	22.380	0.0900	
26	1300	0.0006	0.0162	0.8625	0.0708	
27	1350	0.0134	0.3562	16.113	0.0833	
28	1400	0.0006	0.0162	0.9288	0.0657	
29	1450	0.0055	0.1457	7.0801	0.0776	
30	1500	0.0006	0.0162	0.9951	0.0613	
31	1550	0.0189	0.5019	26.069	0.0726	
32	1600	0.0012	0.0324	2.1230	0.0575	
33	1650	0.0067	0.1781	9.8470	0.0682	
34	1700	0.0012	0.0324	2.2556	0.0541	
35	1750	0.0092	0.2429	14.242	0.0643	
36	1800	0.0006	0.0162	1.1942	0.0511	
37	1850	0.0110	0.2915	18.066	0.0608	
38	1900	0.0012	0.0324	2.5210	0.0484	
39	1950	0.0061	0.1619	10.579	0.0577	
40	2000	0.0012	0.0324	2.6537	0.0460	

NOTE: Limits classified according to item 7.4.3.

This report shall not be reproduced except in full, without the written approval of Compliance Certification Services.

7.5. VOLTAGE FLUCTUATION AND FLICKS MEASUREMENT

7.5.1. LIMITS OF VOLTAGE FLUCTUATION AND FLICKS MEASUREMENT

TEST ITEM	LIMIT	REMARK
P_{st}	1.0	P_{st} means short-term flicker indicator.
P_{lt}	0.65	P_{lt} means long-term flicker indicator.
T_{dt} (ms)	500	T_{dt} means maximum time that dt exceeds 3.3 %.
d_{max} (%)	4%	d_{max} means maximum relative voltage change.
dc (%)	3.3%	dc means relative steady-state voltage change

7.5.2. TEST INSTRUMENTS

Immunity Shielded Room				
Name of Equipment	**Manufacturer**	**Model**	**Serial Number**	**Calibration Due**
HARMONICS SYSTEM	EMC-PARTNER	HARMONICS-1000	094	01/18/2011
Test S/W	HARCS Immunity (4.10)			

NOTE: The calibration interval of the above test instruments is 12 months and the calibrations are traceable to NML/ROC and NIST/USA.

This report shall not be reproduced except in full, without the written approval of Compliance Certification Services.

7.5.3. TEST PROCEDURE (please refer to measurement standard or CCS SOP PA-030)

- The EUT was placed on the top of a wooden table 0.8 meters above the ground and operated to produce the most unfavorable sequence of voltage changes under normal operating conditions.
- During the flick measurement, the measure time shall include that part of whole operation cycle in which the EUT produce the most unfavorable sequence of voltage changes. The observation period for short-term flicker indicator is 10 minutes and the observation period for long-term flicker indicator is 2 hours.

7.5.4. TEST SETUP

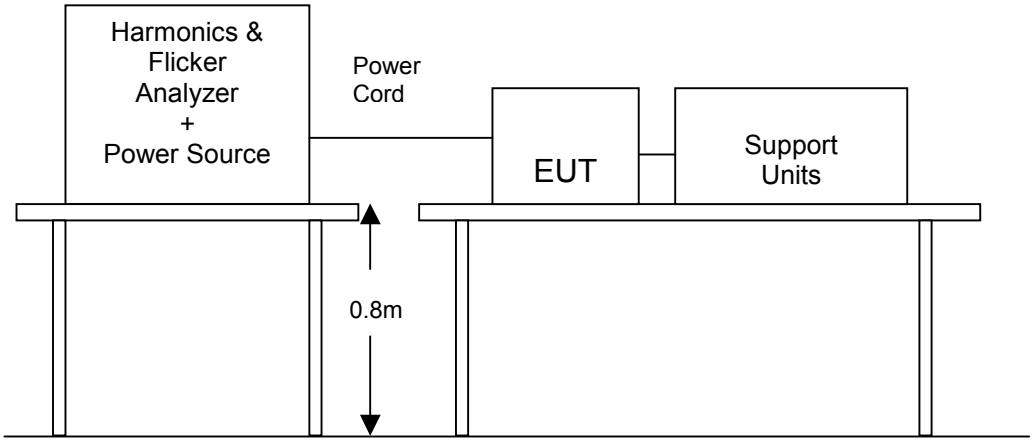

- For the actual test configuration, please refer to the related item – Photographs of the Test Configuration.

This report shall not be reproduced except in full, without the written approval of Compliance Certification Services.

7.5.5. TEST RESULTS

Observation Period (Tp)	10mins	**Test Mode**	Mode 1
Environmental Conditions	20°C, 50% RH	**Tested By**	Tony Tsai

TEST PARAMETER	MEASUREMENT VALUE	LIMIT	REMARK
P_{st}	0.072	1.0	PASS
P_{lt}	0.072	0.65	PASS
T_{dt} (ms)	0	500	PASS
d_{max} (%)	0%	4%	PASS
dc (%)	0%	3.3%	PASS

Note: d_{max} (%) limit classified:
1. 6% for equipment which is switched manually or switched automatically more frequently than twice per day.
2. 7% for equipment which is attended whilst use or switched on automatically no more than twice per day

This report shall not be reproduced except in full, without the written approval of Compliance Certification Services.

Supermicro Date : 2010/12/7 PM 01:44 V4.17

Operator : Tony Tsai
Unit : Switching Power supply
Serial number : PWS-920P-SQ
Remarks : Temp.:20°C Hum:50%

Urms =	228.3V	Freq =	50.000	Range:	10 A
Irms =	3.789A	Ipk =	6.157A	cf =	1.625
P =	853.3W	S =	865.2VA	pf =	0.986

Test - Time : 1 x 10min = 10min (100 %)

LIN (Line Impedance Network) : L: 0.24ohm +j0.15ohm N: 0.16ohm +j0.10ohm

Limits :	Plt :	0.65	Pst :	1.00	
		dmax :	4.00 %	dc :	3.30 %
		dtLim:	3.30 %	dt>Lim:	500ms

Test completed, Result: PASSED

Plt = 0.072

	Pst	dmax [%]	dc [%]	dt>Lim [ms]	Fail
1	0.072	0.000	0.000	0.000	

This report shall not be reproduced except in full, without the written approval of Compliance Certification Services.

8 IMMUNITY TEST

8.1. GENERAL DESCRIPTION

Product Standard	EN 55024: 1998 + A1: 2001 + A2: 2003	
	Test Type	**Minimum Requirement**
Basic Standard, Specification, and Performance Criterion required	IEC 61000-4-2	Electrostatic Discharge – ESD: 8kV air discharge, 4kV Contact discharge, Performance Criterion B
	IEC 61000-4-3	Radio-Frequency Electromagnetic Field Susceptibility Test – RS: 80 ~1000 MHz, 3V/m, 80% AM(1kHz), Performance Criterion A
	IEC 61000-4-4	Electrical Fast Transient/Burst - EFT, AC Power Port: 1kV DC Power Port: 0.5kV Signal Ports and Telecommunication Ports: 0.5kV Performance Criterion B
	IEC 61000-4-5	Surge Immunity Test: 1.2/50 us Open Circuit Voltage 8/20 μs Short Circuit Current AC Power Port ~ line to line: 1kV, line to earth (ground): 2kV DC Power Port ~ line to earth: 0.5kV Signal Ports and Telecommunication Ports ~ line to ground: 1kV Performance Criterion B
	IEC 61000-4-6	Conducted Radio Frequency Disturbances Test – CS: 0.15 ~ 80 MHz, 3Vrms, 80% AM, 1kHz, Performance Criterion A
	IEC 61000-4-8	Power frequency magnetic field immunity test 50 Hz, 1A/m Performance Criterion A
	IEC 61000-4-11	Voltage Dips: i) >95% reduction for 0.5 period, Performance Criterion B ii) 30% reduction for 25 period, Performance Criterion C Voltage Interruptions: >95% reduction for 250 period Performance Criterion C

This report shall not be reproduced except in full, without the written approval of Compliance Certification Services.

8.2. GENERAL PERFORMANCE CRITERIA DESCRIPTION

Criteria A:	The apparatus shell continues to operate as intended without operator intervention. No degradation of performance or loss of function is allowed below a performance level specified by the manufacturer, when the apparatus is used as intended. The performance level may be replaced by a permissible loss of performance. If the manufacturer does not specify the minimum performance level or the permissible performance loss, then either of these may be derived from the product description and documentation, and by what the user may reasonably expect from the equipment if used as intended.
Criteria B:	After test, the apparatus shell continues to operate as intended without operator intervention. No degradation of performance or loss of function is allowed, after the application of the phenomenon below a performance level specified by the manufacturer, when the apparatus is used as intended. The performance level may be replaced by a permissible loss of performance. During the test, degradation of performance is however allowed. However, no change of operating state if stored data is allowed to persist after the test. If the manufacturer does not specify the minimum performance level or the permissible performance loss, then either of these may be derived from the product description and documentation, and by what the user may reasonably expect from the equipment if used as intended.
Criteria C:	Temporary loss of function is allowed, provided the functions is self-recoverable or can be restored by the operation of controls by the user in accordance with the manufacturer instructions. Functions, and/or information stored in non-volatile memory, or protected by a battery backup, shall not be lost.

This report shall not be reproduced except in full, without the written approval of Compliance Certification Services.

8.3. ELECTROSTATIC DISCHARGE (ESD)

8.3.1. TEST SPECIFICATION

Basic Standard:	IEC 61000-4-2
Discharge Impedance:	330 ohm / 150 pF
Discharge Voltage:	Air Discharge: 2 ; 4 ; 8 kV (Direct) Contact Discharge: 2 ; 4 kV (Direct/Indirect)
Polarity:	Positive & Negative
Number of Discharge:	Air Discharge: min. 10 times at single test point for each negative and positive polarity Contact Discharge: min. 200 times in total
Discharge Mode:	Single Discharge 1 second minimum

8.3.2. TEST INSTRUMENT

Immunity Shielded Room				
Name of Equipment	**Manufacturer**	**Model**	**Serial Number**	**Calibration Due**
ESD Generator	EM TEST	P30C	V0628101604	03/29/2011

NOTE: The calibration interval of the above test instruments is 12 months and the calibrations are traceable to NML/ROC and NIST/USA.

This report shall not be reproduced except in full, without the written approval of Compliance Certification Services.

8.3.3. TEST PROCEDURE (please refer to measurement standard or CCS SOP PA-022)

The discharges shall be applied in two ways:

a) Contact discharges to the conductive surfaces and coupling planes:
The EUT shall be exposed to at least 200 discharges, 100 each at negative and positive polarity, at a minimum of four test points. One of the test points shall be subjected to at least 50 indirect discharges to the center of the front edge of the **H**orizontal **C**oupling **P**lane (**HCP**). The remaining three test points shall each receive at least 50 direct contact discharges. If no direct contact test points are available, then at least 200 indirect discharges shall be applied in the indirect mode. Test shall be performed at a maximum repetition rate of one discharge per second.

b) Air discharges at slots and apertures and insulating surfaces:
On those parts of the EUT where it is not possible to perform contact discharge testing, the equipment should be investigated to identify user accessible points where breakdown may occur. Such points are tested using the air discharge method. This investigation should be restricted to those area normally handled by the user. A minimum of 10 single air discharges shall be applied to the selected test point for each such area.

The basic test procedure was in accordance with IEC 61000-4-2:

a) The EUT was located 0.1 m minimum from all side of the **HCP** (dimensions 1.6m x 0.8m).
b) The support units were located another table 30 cm away from the EUT, but direct support unit was/were located at same location as EUT on the HCP and keep at a distance of 10 cm with EUT.
c) The time interval between two successive single discharges was at least 1 second.
d) Contact discharges were applied to the non-insulating coating, with the pointed tip of the generator penetrating the coating and contacting the conducting substrate.
e) Air discharges were applied with the round discharge tip of the discharge electrode approaching the EUT as fast as possible (without causing mechanical damage) to touch the EUT. After each discharge, the ESD generator was removed from the EUT and re-triggered for a new single discharge. The test was repeated until all discharges were complete.
f) At least ten single discharges (in the most sensitive polarity) were applied at the front edge of each **HCP** opposite the center point of each unit of the EUT and 0.1 meters from the front of the EUT. The long axis of the discharge electrode was in the plane of the **HCP** and perpendicular to its front edge during the discharge.
g) At least ten single discharges (in the most sensitive polarity) were applied to the center of one vertical edge of the **V**ertical **C**oupling **P**lane (**VCP**) in sufficiently different positions that the four faces of the EUT were completely illuminated. The **VCP** (dimensions 0.5m x 0.5m) was placed vertically to and 0.1 meters from the EUT.

This report shall not be reproduced except in full, without the written approval of Compliance Certification Services.

8.3.4. TEST SETUP

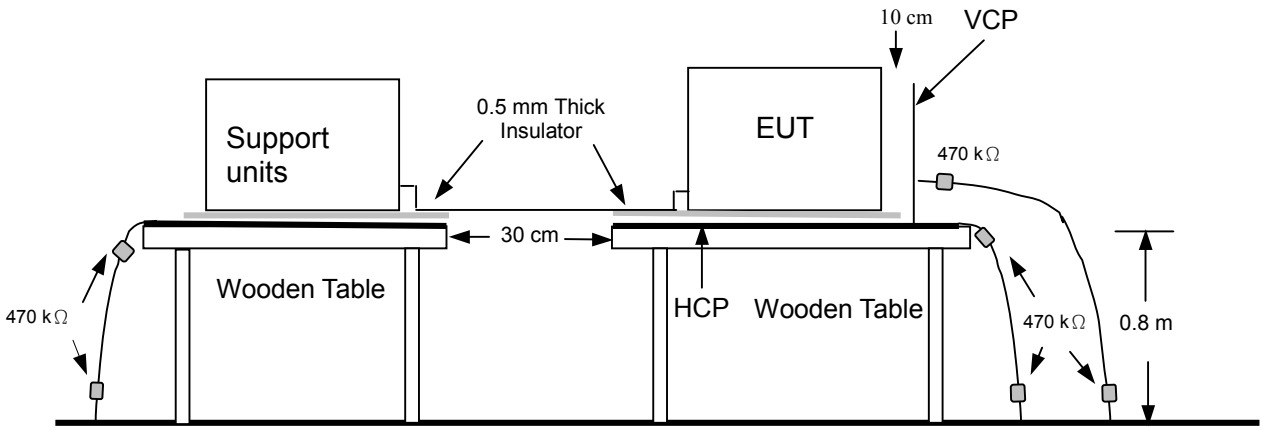

Ground Reference Plane

- For the actual test configuration, please refer to the related item – Photographs of the Test Configuration.

NOTE:

TABLE-TOP EQUIPMENT

The configuration consisted of a wooden table 0.8 meters high standing on the **G**round **R**eference **P**lane. The **GRP** consisted of a sheet of aluminum at least 0.25mm thick, and 2.5 meters square connected to the protective grounding system. A **H**orizontal **C**oupling **P**lane (1.6m x 0.8m) was placed on the table and attached to the **GRP** by means of a cable with 940k . total impedance. The equipment under test, was installed in a representative system as described in section 7 of IEC 61000-4-2, and its cables were placed on the **HCP** and isolated by an insulating support of 0.5mm thickness. A distance of 1-meter minimum was provided between the EUT and the walls of the laboratory and any other metallic structure.

FLOOR-STANDING EQUIPMENT

The equipment under test was installed in a representative system as described in section 7 of IEC 61000-4-2, and its cables were isolated from the Ground Reference Plane by an insulating support of 0.1-meter thickness. The GRP consisted of a sheet of aluminum that is at least 0.25mm thick, and 2.5 meters square connected to the protective grounding system and extended at least 0.5 meters from the EUT on all sides.

This report shall not be reproduced except in full, without the written approval of Compliance Certification Services.

8.3.5. TEST RESULTS

Temperature	19°C	**Humidity**	51% RH
Pressure	992mbar	**Tested By**	Tony Tsai
Required Passing Performance		**Criterion B**	

Air Discharge										
Test Points	**Test Levels**						**Results**		
	± 2 kV	**Performance Criterion of testing**	**± 4 kV**	**Performance Criterion of testing**	**± 8 kV**	**Performance Criterion of testing**	**Pass**	**Fail**	**Observation**
Front	☐	☐A ☐B	☐	☐A ☐B	☐	☐A ☐B	☐	☐	
Back	☐	☐A ☐B	☐	☐A ☐B	☐	☐A ☐B	☐	☐	
Left	☒	☒A ☐B	☒	☒A ☐B	☒	☒A ☐B	☒	☐	**Note 1**
Right	☐	☐A ☐B	☐	☐A ☐B	☐	☐A ☐B	☐	☐	
Top	☐	☐A ☐B	☐	☐A ☐B	☐	☐A ☐B	☐	☐	
Bottom	☐	☐A ☐B	☐	☐A ☐B	☐	☐A ☐B	☐	☐	

Contact Discharge										
Test Points	**Test Levels**						**Results**		
	± 2 kV	**Performance Criterion of testing**	**± 4 kV**	**Performance Criterion of testing**	**± 8 kV**	**Performance Criterion of testing**	**Pass**	**Fail**	**Observation**
Front	☒	☒A ☐B	☒	☒A ☐B	☐	☐A ☐B	☒	☐	**Note 1**
Back	☒	☒A ☐B	☒	☒A ☐B	☐	☐A ☐B	☒	☐	**Note 1**
Left	☒	☒A ☐B	☒	☒A ☐B	☐	☐A ☐B	☒	☐	**Note 1**
Right	☐	☐A ☐B	☐	☐A ☐B	☐	☐A ☐B	☐	☐	
Top	☐	☐A ☐B	☐	☐A ☐B	☐	☐A ☐B	☐	☐	
Bottom	☐	☐A ☐B	☐	☐A ☐B	☐	☐A ☐B	☐	☐	

For the tested points to EUT, please refer to attached page.
(Blue arrow mark for Contact Discharge and red arrow mark for Air Discharge)

Discharge To Horizontal Coupling Plane							
Side of EUT	**Test Levels**			**Results**			
	± 2 kV	**± 4 kV**	**± 8 kV**	**Pass**	**Fail**	**Performance Criterion of testing**	**Observation**
Front	☒	☒	☐	☒	☐	☒A ☐B	**Note 1**
Back	☒	☒	☐	☒	☐	☒A ☐B	**Note 1**
Left	☒	☒	☐	☒	☐	☒A ☐B	**Note 1**
Right	☒	☒	☐	☒	☐	☒A ☐B	**Note 1**

Discharge To Vertical Coupling Plane							
Side of EUT	**Test Levels**			**Results**			
	± 2 kV	**± 4 kV**	**± 8 kV**	**Pass**	**Fail**	**Performance Criterion of testing**	**Observation**
Front	☒	☒	☐	☒	☐	☒A ☐B	**Note 1**
Back	☒	☒	☐	☒	☐	☒A ☐B	**Note 1**
Left	☒	☒	☐	☒	☐	☒A ☐B	**Note 1**
Right	☒	☒	☐	☒	☐	☒A ☐B	**Note 1**

NOTE: 1. There was no change compared with initial operation during the test.

This report shall not be reproduced except in full, without the written approval of Compliance Certification Services.

The Tested Points of EUT

Photo 1 of 3

Photo 2 of 3

This report shall not be reproduced except in full, without the written approval of Compliance Certification Services.

Photo 3 of 3

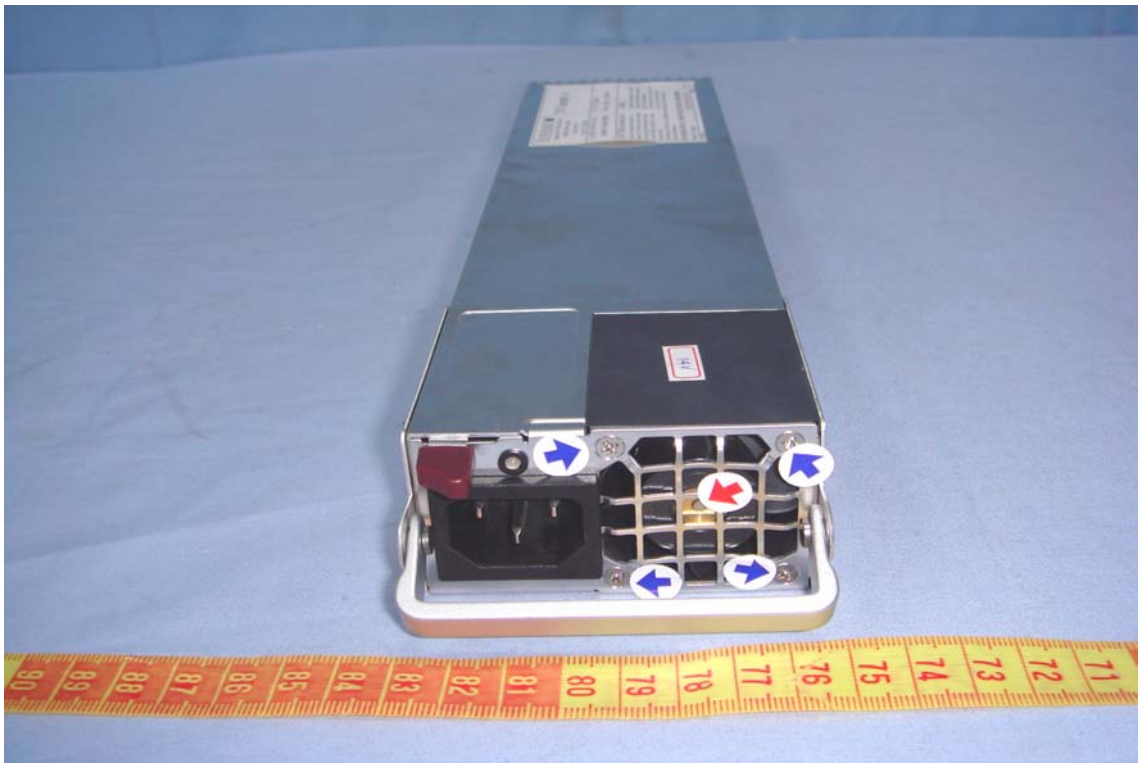

This report shall not be reproduced except in full, without the written approval of Compliance Certification Services.

8.4. RADIATED, RADIO-FREQUENCY, ELECTROMAGNETIC FIELD (RS)

8.4.1. TEST SPECIFICATION

Basic Standard:	IEC 61000-4-3
Frequency Range:	80 MHz ~1000 MHz,
Field Strength:	3 V/m
Modulation:	1kHz Sine Wave, 80%, AM Modulation
Frequency Step:	1 % of preceding frequency value
Polarity of Antenna:	Horizontal and Vertical
Test Distance:	3 m
Antenna Height:	1.5m

8.4.2. TEST INSTRUMENT

733 RS Chamber				
Name of Equipment	**Manufacturer**	**Model**	**Serial Number**	**Calibration Due**
S.G.	Agilent	8648C	4108A05772	11/17/2011
Power Meter	R&S	NRVD	837794/029	08/15/2011
Power Sensor	R&S	URV5-Z2	835640/015	08/15/2011
Power Sensor	R&S	URV5-Z2	835640/016	08/15/2011
Power Amplifier	ar	150W1000	300300	N.C.R
Power Amplifier	ar	60S1G3M3	0328274	N.C.R
Bilog Antenna	SCHAFFNER	CBL 6140A	1221	N.C.R
Horn Antenna	EMCO	3115	00022257	11/19/2011
EM PROBE	ar	FL7006	0330722	03/15/2011
Test S/W	SW1006 (V1.13)			

NOTE: 1. The calibration interval of the above test instruments is 12 months and the calibrations are traceable to NML/ROC and NIST/USA.
2. N.C.R.= No Calibration required

This report shall not be reproduced except in full, without the written approval of Compliance Certification Services.

8.4.3. TEST PROCEDURE (please refer to measurement standard or CCS SOP PA-023)

The test procedure was in accordance with IEC 61000-4-3

a) The testing was performed in a fully anechoic chamber. The transmit antenna was located at a distance of 3 meters from the EUT.

b) The frequency range is swept from 80 MHz to 1000 MHz, with the signal 80% amplitude modulated with a 1kHz sine-wave. The rate of sweep did not exceed 1.5×10^{-3} decade/s, where the frequency range is swept incrementally, the step size was 1% of preceding frequency value.

c) The dwell time at each frequency shall be not less than the time necessary for the EUT to be able to respond.

e) The test was performed with the EUT exposed to both vertically and horizontally polarized fields on each of the four sides.

This report shall not be reproduced except in full, without the written approval of Compliance Certification Services.

8.4.4. TEST SETUP

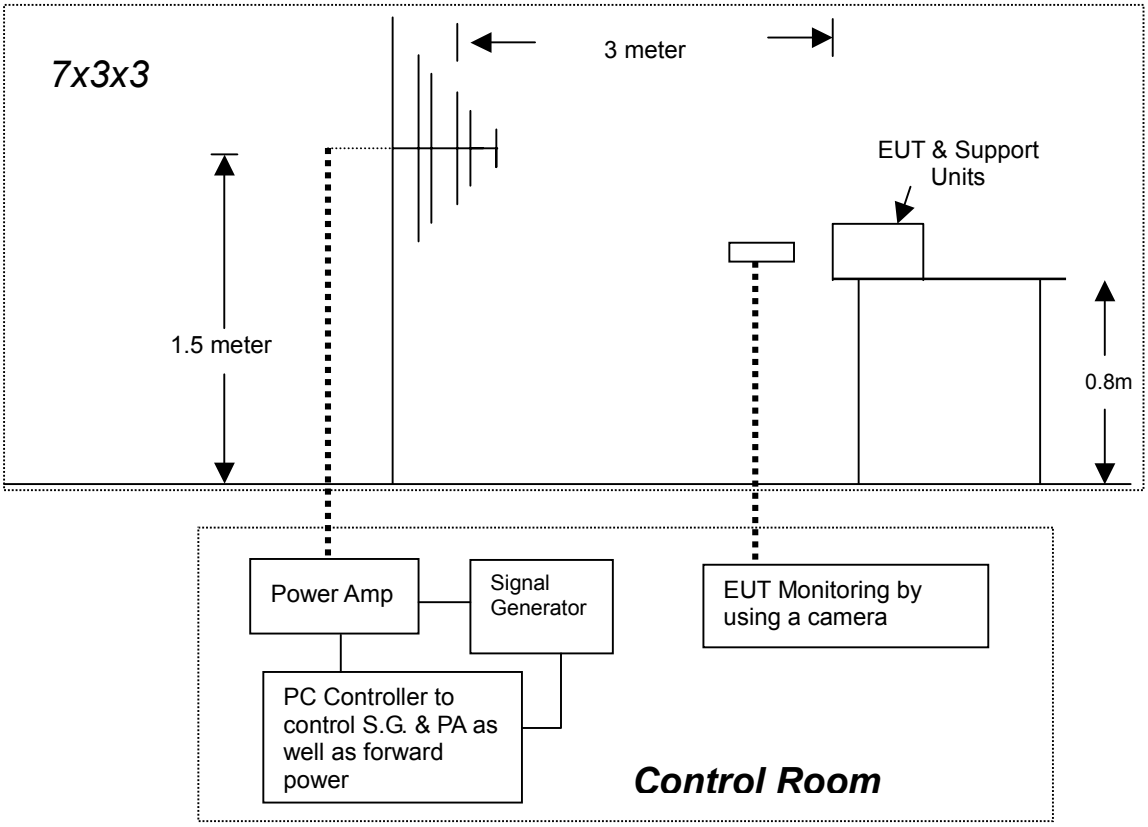

- For the actual test configuration, please refer to the related item – Photographs of the Test Configuration.

NOTE:

TABLETOP EQUIPMENT

The EUT installed in a representative system as described in section 7 of IEC 61000-4-3 was placed on a non-conductive table 0.8 meters in height. The system under test was connected to the power and signal wire according to relevant installation instructions.

FLOOR STANDING EQUIPMENT

The EUT installed in a representative system as described in section 7 of IEC 61000-4-3 was placed on a non-conductive wood support 0.1 meters in height. The system under test was connected to the power and signal wire according to relevant installation instructions.

This report shall not be reproduced except in full, without the written approval of Compliance Certification Services.

8.4.5. TEST RESULTS

Temperature	20°C	**Humidity**	50% RH
Pressure	995mbar	**Dwell Time**	3 sec.
Tested By	Tony Tsai	**Required Passing Performance**	**Criterion A**

Frequency (MHz)	Polarity	Azimuth	Field Strength (V/m)	Performance Criterion of testing	Observation	Result
80 ~ 1000	V&H	0	3	☒A ☐B	**Note 1**	PASS
80 ~ 1000	V&H	90	3	☒A ☐B	**Note 1**	PASS
80 ~ 1000	V&H	180	3	☒A ☐B	**Note 1**	PASS
80 ~ 1000	V&H	270	3	☒A ☐B	**Note 1**	PASS

NOTE: 1. There was no change compared with the initial operation during the test.

This report shall not be reproduced except in full, without the written approval of Compliance Certification Services.

8.5. ELECTRICAL FAST TRANSIENT (EFT)

8.5.1. TEST SPECIFICATION

Basic Standard:	IEC 61000-4-4
Test Voltage:	AC Power Port: 1kV DC Power Port: 0.5kV Signal Ports and Telecommunication Ports: 0.5kV
Polarity:	Positive & Negative
Impulse Frequency:	5 kHz
Impulse Wave-shape:	5/50 ns
Burst Duration:	15 ms
Burst Period:	3 Hz
Test Duration:	Not less than 1 min.

8.5.2. TEST INSTRUMENT

Immunity Shield Room				
Name of Equipment	**Manufacturer**	**Model**	**Serial Number**	**Calibration Due**
EMC TEST SYSTEM	EMC-PARTNER	TRANSIENT-2000	754	09/06/2011
Test S/W	Genecs (2.54)			

NOTE: 1. The calibration interval of the above test instruments is 12 months and the calibrations are traceable to NML/ROC and NIST/USA.
2. N.C.R.= No Calibration required

8.5.3. TEST PROCEDURE (please refer to measurement standard or CCS SOP PA-024)

a) Both positive and negative polarity discharges were applied.

b) The length of the "hot wire" from the coaxial output of the EFT generator to the terminals on the EUT should not exceed 1 meter.

c) The duration time of each test sequential was 1 minute.

d) The transient/burst waveform was in accordance with IEC 61000-4-4, 5/50ns.

This report shall not be reproduced except in full, without the written approval of Compliance Certification Services.

8.5.4. TEST SETUP

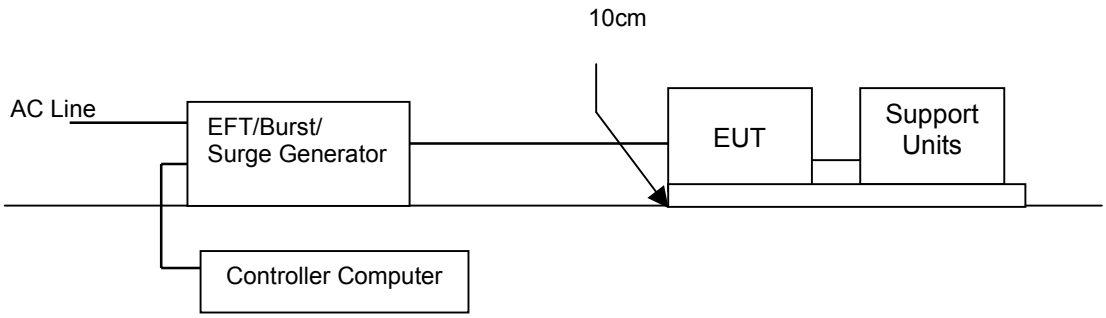

- For the actual test configuration, please refer to the related item – Photographs of the Test Configuration.

NOTE:

TABLETOP EQUIPMENT

The configuration consisted of a wooden table (0.8m high) standing on the Ground Reference Plane. The GRP consisted of a sheet of aluminum (at least 0.25mm thick and 2.5m square) connected to the protective grounding system. A minimum distance of 0.5m was provided between the EUT and the walls of the laboratory or any other metallic structure.

FLOOR STANDING EQUIPMENT

The EUT installed in a representative system as described in section 7 of IEC 61000-4-4 and its cables, were isolated from the Ground Reference Plane by an insulating support that is 0.1-meter thick. The GRP consisted of a sheet of aluminum (at least 0.25mm thick and 2.5m square) connected to the protective grounding system.

8.5.5. TEST RESULTS

Temperature	21°C	**Humidity**	52% RH
Pressure	996mbar	**Tested By**	Tony Tsai
Required Passing Performance		**Criterion B**	

Test Point	Polarity	Test Level (kV)	Performance Criterion of testing	Observation	Result
L	+/-	1	☒A ☐B	**Note 1**	PASS
N	+/-	1	☒A ☐B	**Note 1**	PASS
PE	+/-	1	☒A ☐B	**Note 1**	PASS
L+N	+/-	1	☒A ☐B	**Note 1**	PASS
L +PE	+/-	1	☒A ☐B	**Note 1**	PASS
N + PE	+/-	1	☒A ☐B	**Note 1**	PASS
L +N +PE	+/-	1	☒A ☐B	**Note 1**	PASS

NOTE: 1. There was no change compared with initial operation during the test.

This report shall not be reproduced except in full, without the written approval of Compliance Certification Services.

8.6. SURGE IMMUNITY TEST

8.6.1. TEST SPECIFICATION

Basic Standard:	IEC 61000-4-5
Wave-Shape:	Combination Wave 1.2/50 us Open Circuit Voltage 8/20 μs Short Circuit Current
Test Voltage:	AC Power Port ~ line to line: 1kV, line to earth (ground): 2kV DC Power Port ~ line to earth: 0.5kV Signal Ports and Telecommunication Ports ~ line to ground: 1kV
Surge Input/Output:	AC Power Port: L1-L2 / L1-PE / L2-PE DC Power Port: L1-PE Signal Ports and Telecommunication Ports: T to Ground/ R to Ground
Generator Source Impedance:	2 ohm between networks 12 ohm between network and ground
Polarity:	Positive/Negative
Phase Angle:	0 / 90 / 180 / 270
Pulse Repetition Rate:	1 time / min. (maximum)
Number of Tests:	5 positive and 5 negative at selected points

8.6.2. TEST INSTRUMENT

Immunity Shield Room				
Name of Equipment	**Manufacturer**	**Model**	**Serial Number**	**Calibration Due**
Surge Tester	HAEFELY TRENCH	PSUGER 4010	583 334-71	09/06/2011
Test S/W	Winpats (3.25)			

NOTE: 1. The calibration interval of the above test instruments is 12 months and the calibrations are traceable to NML/ROC and NIST/USA.
2. N.C.R.= No Calibration required

This report shall not be reproduced except in full, without the written approval of Compliance Certification Services.

8.6.3. TEST PROCEDURE (please refer to measurement standard or CCS SOP PA-025)

a) For EUT power supply:

The surge is applied to the EUT power supply terminals via the capacitive coupling network. Decoupling networks are required in order to avoid possible adverse effects on equipment not under test that may be powered by the same lines, and to provide sufficient decoupling impedance to the surge wave. The power cord between the EUT and the coupling/decoupling networks was shorter than 2 meters in length.

b) For test applied to unshielded un-symmetrically operated interconnection lines of EUT:

The surge was applied to the lines via the capacitive coupling. The coupling / decoupling networks didn't influence the specified functional conditions of the EUT. The interconnection line between the EUT and the coupling/decoupling networks was shorter than 2 meters in length.

c) For test applied to unshielded symmetrically operated interconnection / telecommunication lines of EUT:

The surge was applied to the lines via gas arrestors coupling. Test levels below the ignition point of the coupling arrestor were not specified. The interconnection line between the EUT and the coupling/decoupling networks was shorter than 2 meters in length.

8.6.4. TEST SETUP

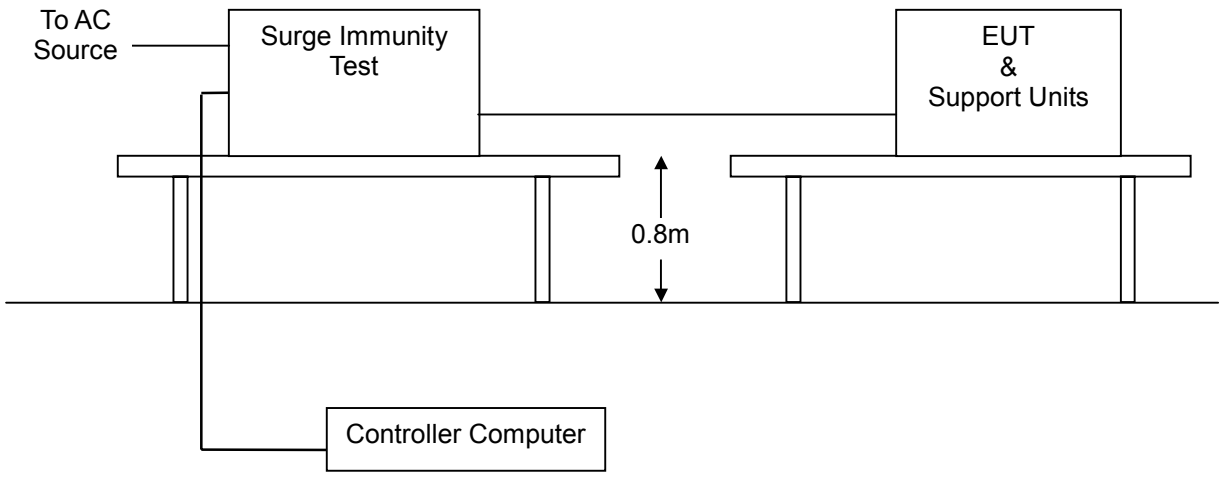

- For the actual test configuration, please refer to the related item – Photographs of the Test Configuration.

This report shall not be reproduced except in full, without the written approval of Compliance Certification Services.

8.6.5. TEST RESULTS

Temperature	21°C	**Humidity**	52% RH
Pressure	996mbar	**Tested By**	Tony Tsai
Required Passing Performance		**Criterion B**	

Test Point	Polarity	Test Level (kV)	Performance Criterion of testing	Observation	Result
L – N	+/-	1	☒A ☐B	**Note 1**	PASS
L - PE	+/-	2	☒A ☐B	**Note 1**	PASS
N - PE	+/-	2	☒A ☐B	**Note 1**	PASS

NOTE: 1. There was no change compared with initial operation during the test.

This report shall not be reproduced except in full, without the written approval of Compliance Certification Services.

8.7. CONDUCTED RADIO FREQUENCY DISTURBANCES (CS)

8.7.1. TEST SPECIFICATION

Basic Standard:	IEC 61000-4-6
Frequency Range:	0.15 MHz ~ 80 MHz
Field Strength:	3 Vrms
Modulation:	1kHz Sine Wave, 80%, AM Modulation
Frequency Step:	1 % of preceding frequency value
Coupled cable:	Power Mains, Unshielded
Coupling device:	CDN-M3 (3 wires)

8.7.2. TEST INSTRUMENT

Immunity Shield Room				
Name of Equipment	**Manufacturer**	**Model**	**Serial Number**	**Calibration Due**
S.G.	Agilent	8648C	4108A05772	11/17/2011
Power Meter	R&S	NRVD	837794/029	08/15/2011
Power Sensor	R&S	URV5-Z2	835640/015	08/15/2011
Power Sensor	R&S	URV5-Z2	835640/016	08/15/2011
Power Amplifier	ar	75A250AM1	306334	N.C.R
CDN	FCC	FCC-801-M3-16A	99122	11/30/2011
Test S/W	SW1006 (V1.13)			

NOTE: 1. The calibration interval of the above test instruments is 12 months and the calibrations are traceable to NML/ROC and NIST/USA.
2. N.C.R.= No Calibration required

This report shall not be reproduced except in full, without the written approval of Compliance Certification Services.

8.7.3. TEST PROCEDURE (please refer to measurement standard or CCS SOP PA-026)

The EUT shall be tested within its intended operating and climatic conditions.

The test shell performed with the test generator connected to each of the coupling and decoupling devices in turn, while the other non-excited RF input ports of the coupling devices are terminated by a 50-ohm load resistor.

The frequency range was swept from 150 kHz to 80 MHz, using the signal level established during the setting process and with a disturbance signal of 80 % amplitude. The signal was modulated with a 1 kHz sine wave, pausing to adjust the RF signal level or the switch coupling devices as necessary. The sweep rate was 1.5×10^{-3} decades/s. Where the frequency range is swept incrementally, the step size was 1 % of preceding frequency value from 150 kHz to 80 MHz.

The dwell time at each frequency was less than the time necessary for the EUT to be exercised, and able to respond. Sensitive frequencies such as clock frequency(ies) and harmonics or frequencies of dominant interest, was analyzed separately.

Attempts was made to fully exercise the EUT during testing, and to fully interrogate all exercise modes selected for susceptibility.

This report shall not be reproduced except in full, without the written approval of Compliance Certification Services.

8.7.4. TEST SETUP

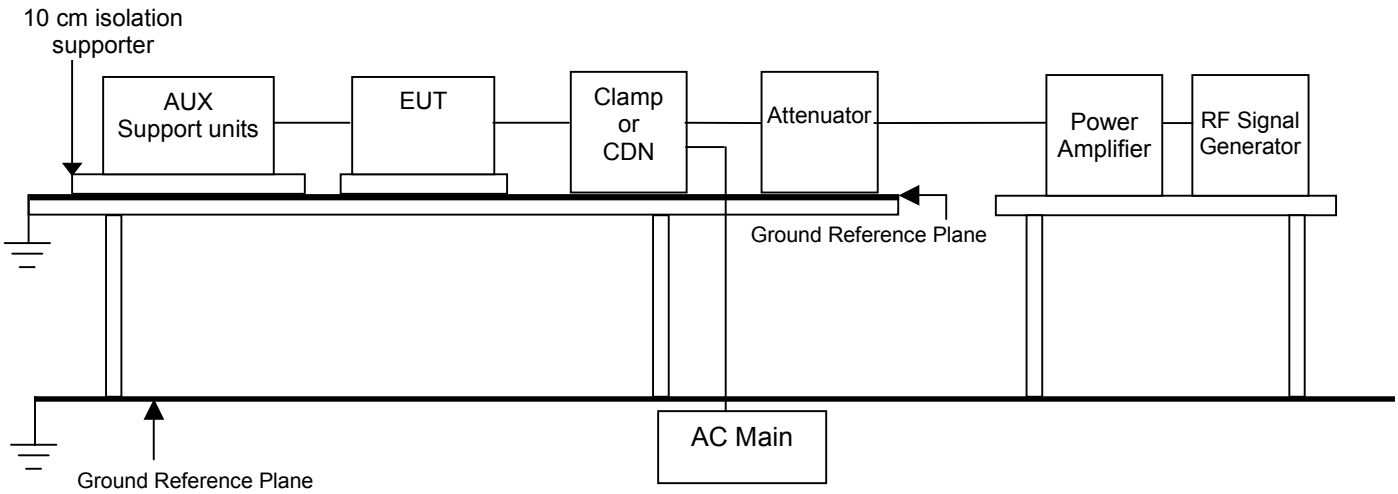

Note: 1. The EUT is setup 0.1m above Ground Reference Plane
2. The CDNs and / or EM clamp used for real test depends on ports and cables configuration of EUT.

- For the actual test configuration, please refer to the related item – Photographs of the Test Configuration.

NOTE:

TABLE-TOP AND FLOOR-STANDING EQUIPMENT

The equipment to be tested was placed on an insulating support of 0.1 meters height above a ground reference plane. All relevant cables shall be provided with the appropriate coupling and decoupling devices at a distance between 0.1 meters and 0.3 meters from the projected geometry of the EUT on the ground reference plane.

8.7.5. TEST RESULTS

Temperature	20°C	**Humidity**	50% RH
Pressure	995mbar	**Tested By**	Tony Tsai
Required Passing Performance		**Criterion A**	

Frequency Band (MHz)	Field Strength (Vrms)	Cable	Injection Method	Performance Criterion of testing	Observation	Result
0.15 ~ 80	3	Power Line	CDN-M3	☒A ☐B	**Note 1**	PASS

NOTE: 1. There was no change compared with initial operation during the test.

This report shall not be reproduced except in full, without the written approval of Compliance Certification Services.

8.8. POWER FREQUENCY MAGNETIC FIELD

8.8.1. TEST SPECIFICATION

Basic Standard:	IEC 61000-4-8
Frequency Range:	50Hz,
Field Strength:	1 A/m
Observation Time:	1 minute
Inductance Coil:	Rectangular type, 1mx1m

8.8.2. TEST INSTRUMENT

Immunity Shield Room				
Name of Equipment	**Manufacturer**	**Model**	**Serial Number**	**Calibration Due**
TRIAX ELF Magnetic Field Meter	F.W.BELL	4090	9711	11/25/2011
Clamp Meter	National	300K	11-5980 K	11/24/2011
Magnetic Field Tester	HAEFELY TRENCH	MAG 100.1	080 938-01	06/03/2011

NOTE: 1. The calibration interval of the above test instruments is 12 months and the calibrations are traceable to NML/ROC and NIST/USA.
2. N.C.R.= No Calibration required

8.8.3. TEST PROCEDURE (please refer to measurement standard or CCS SOP PA-027)

a) The equipment was configured and connected to satisfy its functional requirements. It shall be placed on the GRP with the interposition of a 0.1m-thick insulating support.

b. The equipment cabinets shall be connected to the safety earth directly on the GRP via the earth terminal of the EUT.

c. The power supply, input and output circuits shall be connected to the sources of power supply, control and signal.

d. The cables supplied or recommended by the equipment manufacturer shall be used. 1 meter of all cables used shall be exposed to the magnetic field.

This report shall not be reproduced except in full, without the written approval of Compliance Certification Services.

8.8.4. TEST SETUP

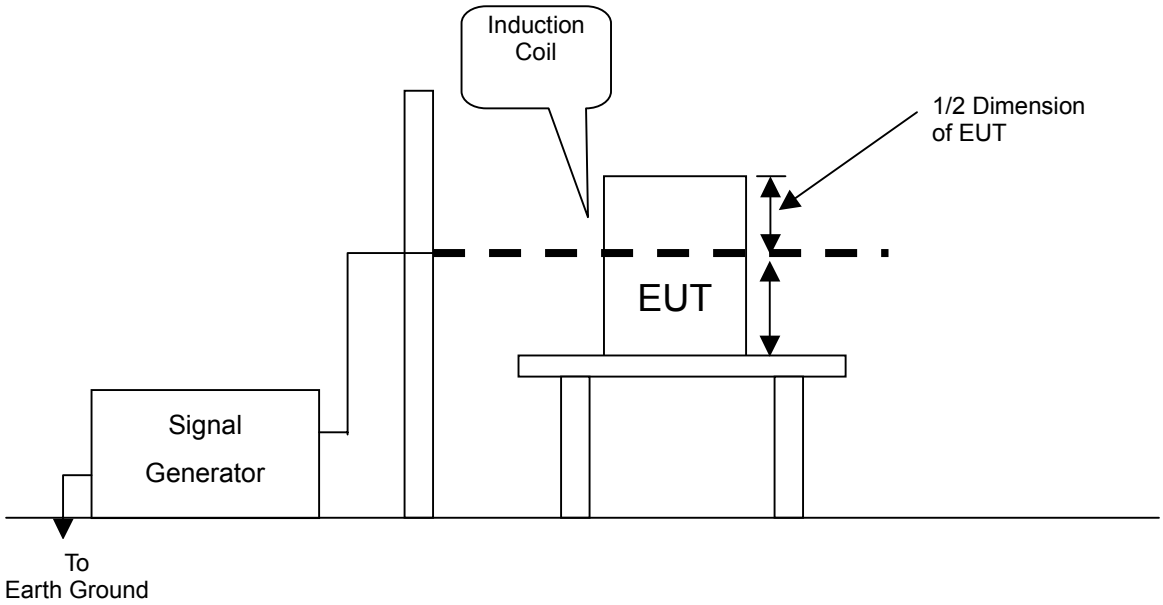

- For the actual test configuration, please refer to the related item – Photographs of the Test Configuration.

NOTE:

TABLETOP EQUIPMENT

The equipment shall be subjected to the test magnetic field by using the induction coil of standard dimension (1 m x 1 m). The induction coil shall then be rotated by 90 degrees in order to expose the EUT to the test field with different orientations.

FLOOR-STANDING EQUIPMENT

The equipment shall be subjected to the test magnetic field by using induction coils of suitable dimensions. The test shall be repeated by moving and shifting the induction coils, in order to test the whole volume of the EUT for each orthogonal direction. The test shall be repeated with the coil shifted to different positions along the side of the EUT, in steps corresponding to 50 % of the shortest side of the coil. The induction coil shall then be rotated by 90 degrees in order to expose the EUT to the test field with different orientations.

This report shall not be reproduced except in full, without the written approval of Compliance Certification Services.

8.8.5. TEST RESULTS

Temperature	19°C	**Humidity**	51% RH
Pressure	992mbar	**Tested By**	Tony Tsai
Required Passing Performance		**Criterion A**	

Direction	Field Strength (A/m)	Performance Criterion of testing	Observation	Results
X	1	☒A ☐B	**Note 1**	Pass
Y	1	☒A ☐B	**Note 1**	Pass
Z	1	☒A ☐B	**Note 1**	Pass

NOTE: 1. There was no change compared with the initial operation during the test.

This report shall not be reproduced except in full, without the written approval of Compliance Certification Services.

8.9. VOLTAGE DIP & VOLTAGE INTERRUPTIONS

8.9.1. TEST SPECIFICATION

Basic Standard:	IEC 61000-4-11
Test duration time:	Minimum three test events in sequence
Interval between event:	Minimum 10 seconds
Angle:	0~360 degree
Step:	45 degree

8.9.2. TEST INSTRUMENT

Immunity shielded room				
Name of Equipment	**Manufacturer**	**Model**	**Serial Number**	**Calibration Due**
Dips/Interruption and Variations Simulator	HAEFELY TRENCH	PLINE 1610	080 344-05	04/29/2011
Test S/W	Winpats (3.25)			

NOTE: 1. The calibration interval of the above test instruments is 12 months and the calibrations are traceable to NML/ROC and NIST/USA.
2. N.C.R.= No Calibration required

8.9.3. TEST PROCEDURE (please refer to measurement standard or CCS SOP PA-028)

1. The EUT and support units were located on a wooden table, 0.8 m away from ground floor.
2. Setting the parameter of tests and then perform the test software of test simulator.
3. Conditions changes to occur at 0 degree crossover point of the voltage waveform.
4. Recording the test result in test record form.
5. Removes the Battery Pack to test if any.

This report shall not be reproduced except in full, without the written approval of Compliance Certification Services.

8.9.4. TEST SETUP

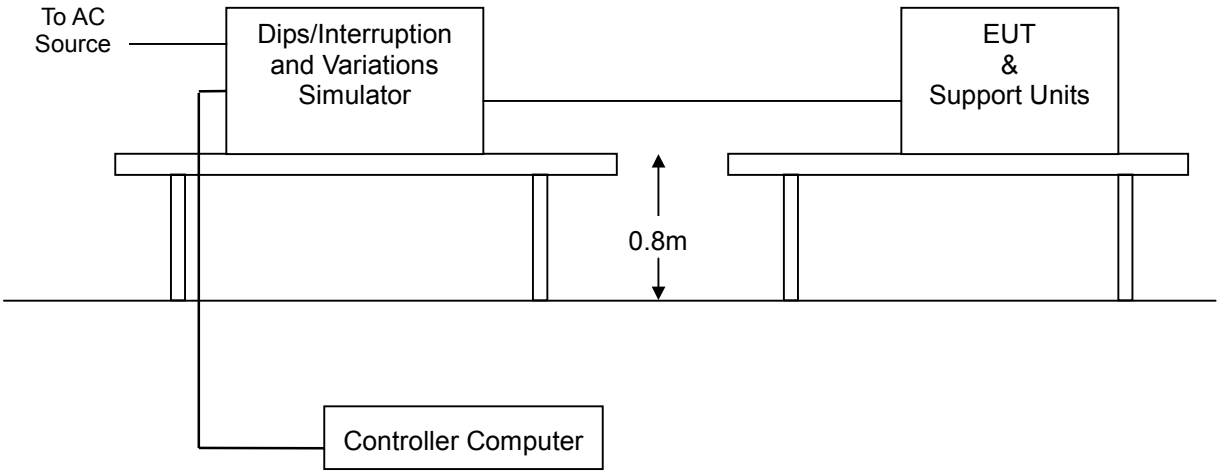

- For the actual test configuration, please refer to the related item – Photographs of the Test Configuration.

8.9.5. TEST RESULTS

Temperature	21°C	**Humidity**	52% RH
Pressure	996mbar	**Tested By**	Tony Tsai
Required Passing Performance	**Criterion B: >95% reduction 0.5 period** **Criterion C: 30% reduction 25 period & >95% reduction 250 period**		

Test Power: 230Vac, 50Hz				
Voltage (% Reduction)	**Duration (Period)**	**Performance Criterion of testing**	**Observation**	**Test Result**
>95	0.5	☒A ☐B ☐C	**Note 1**	PASS
30	25	☒A ☐B ☐C	**Note 1**	PASS
>95	250	☐A ☐B ☒C	**Note 2**	PASS

NOTE
1. There was no change compared with initial operation during and after the test. No unintentional response was found during the test.
2. The function stopped during the test, but can be recoverable manually after the test.

This report shall not be reproduced except in full, without the written approval of Compliance Certification Services.

9 PHOTOGRAPHS OF THE TEST CONFIGURATION

CONDUCTED EMISSION TEST

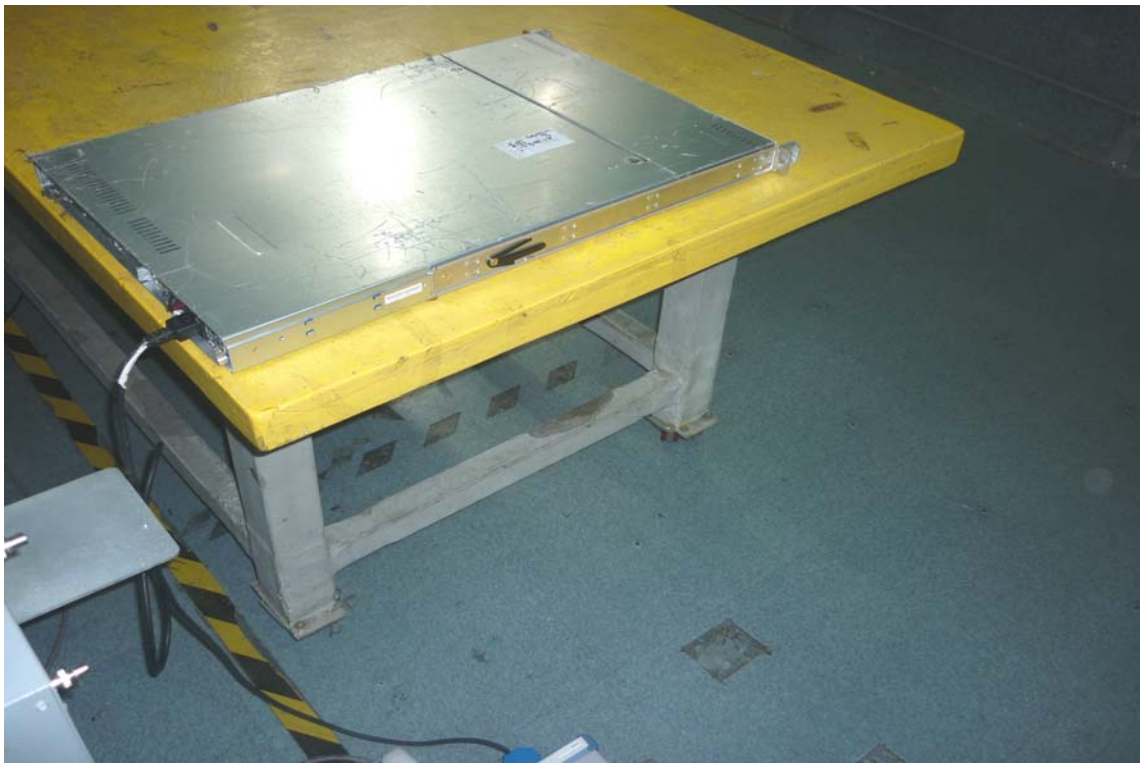

This report shall not be reproduced except in full, without the written approval of Compliance Certification Services.

RADIATED EMISSION TEST

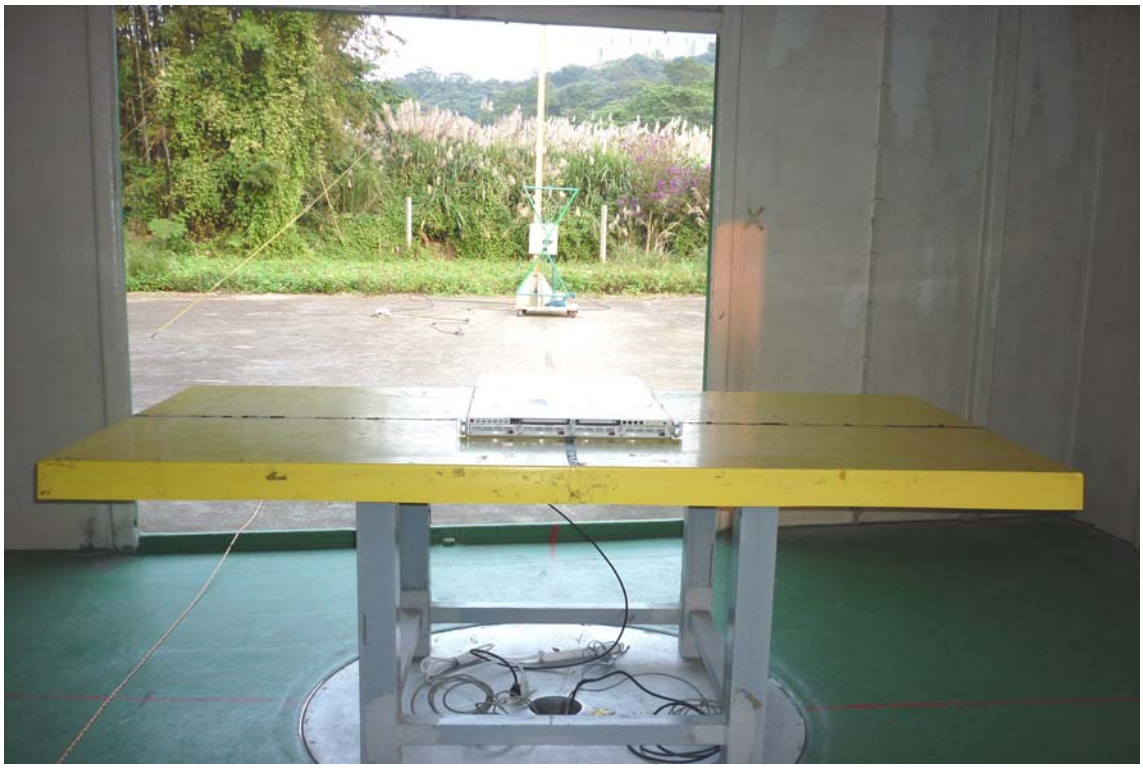

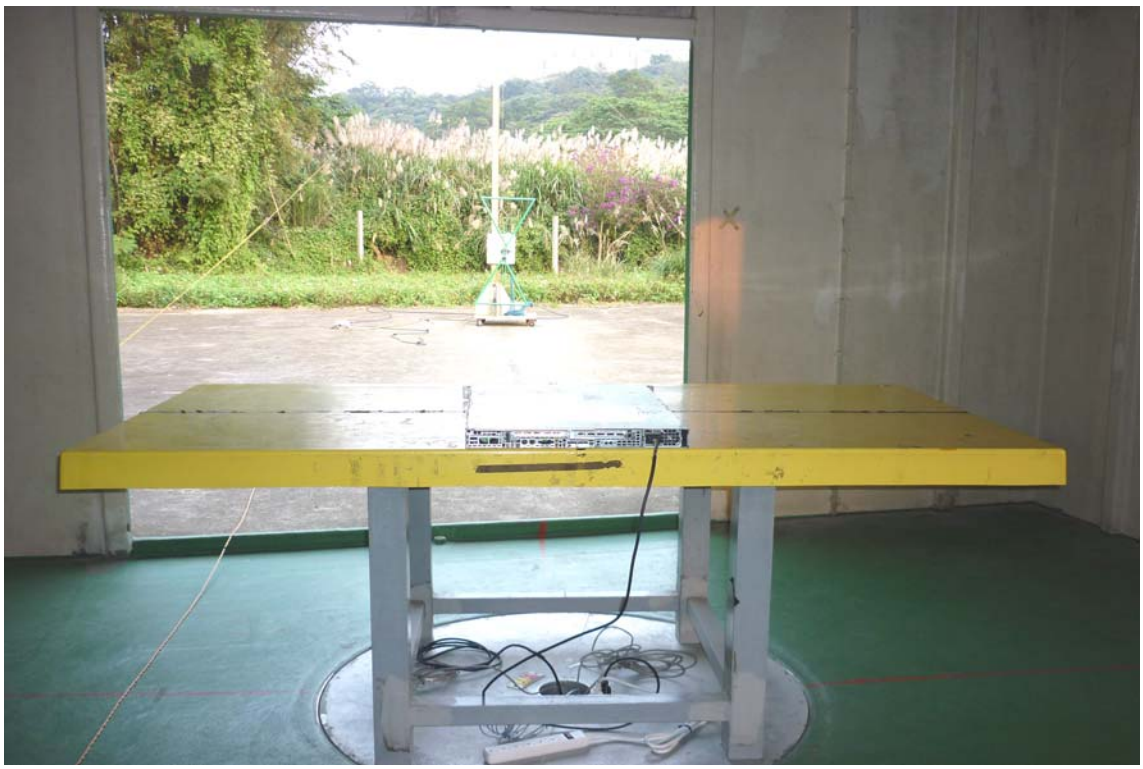

This report shall not be reproduced except in full, without the written approval of Compliance Certification Services.

POWER HARMONIC & VOLTAGE FLUCTUATION / FLICKER TEST

This report shall not be reproduced except in full, without the written approval of Compliance Certification Services.

ELECTROSTATIC DISCHARGE TEST

This report shall not be reproduced except in full, without the written approval of Compliance Certification Services.

RADIATED ELECTROMAGNETIC FIELD TEST

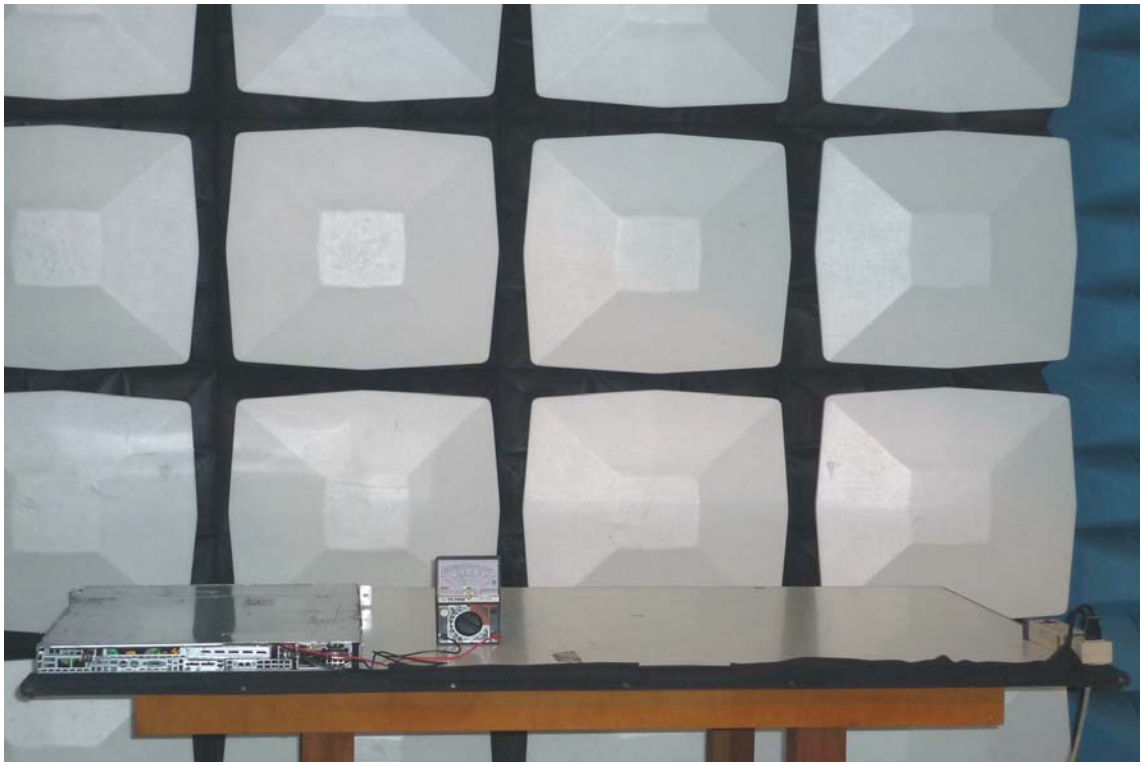

FAST TRANSIENTS/BURST TEST

This report shall not be reproduced except in full, without the written approval of Compliance Certification Services.

SURGE IMMUNITY TEST

CONDUCTED DISTURBANCE TEST

This report shall not be reproduced except in full, without the written approval of Compliance Certification Services.

POWER FREQUENCY MAGENTIC FIELD IMMUNITY TEST

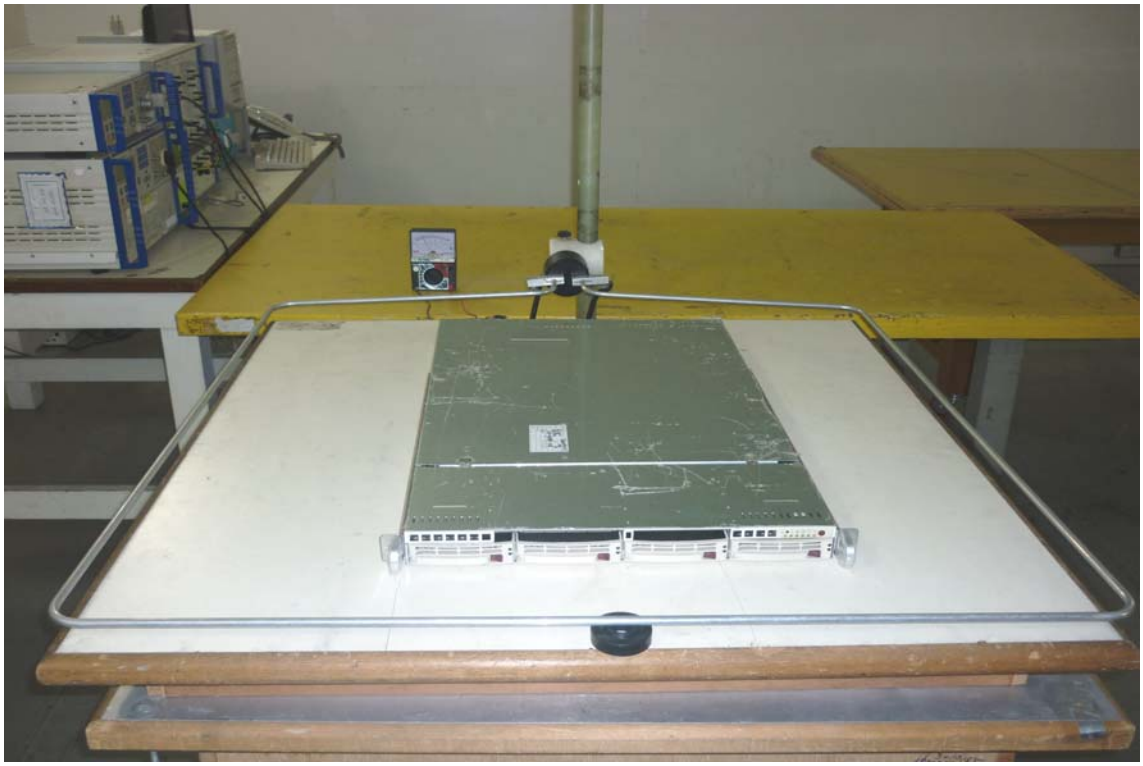

VOLTAGE DIPS / INTERRUPTION TEST

This report shall not be reproduced except in full, without the written approval of Compliance Certification Services.

APPENDIX 1: PHOTOGRAPHS OF EUT

Refer to T101203101 External Photographs.

This report shall not be reproduced except in full, without the written approval of Compliance Certification Services.